Elise

36 Dual Fuel

Owner's Guide

User & Installation Instructions

READ THESE INSTRUCTIONS FULLY BEFORE USE
SAVE THESE INSTRUCTIONS FOR FUTURE REFERENCE

AGA

U111329-04

WARNING! If the information in these instructions is not followed exactly, a fire or explosion may result, causing property damage, personal injury or death.

- **DO NOT store or use gasoline or other flammable vapors and liquids in the vicinity of this or any other appliance.**
- **WHAT TO DO IF YOU SMELL GAS**
  - **DO NOT TRY TO LIGHT ANY APPLIANCE.**
  - **DO NOT TOUCH ANY ELECTRICAL SWITCH.**
  - **DO NOT USE ANY PHONE IN YOUR BUILDING.**
  - **FOLLOW THE GAS SUPPLIER'S INSTRUCTIONS.**
- **If you cannot reach your gas supplier, call the fire department.**
- **Installation and service must be performed by a qualified installer, service agency or the gas supplier.**

WARNING!

The anti-tip device supplied with this range must be installed when the appliance is installed. This will reduce the risk of tipping of the appliance from abnormal usage or by excessive loading of the oven door.

⚠WARNING!

- **DO NOT OPERATE THE RANGE WITHOUT THE ANTI-TIP DEVICE IN PLACE AND ENGAGED.**
- **INSTALL ANTI-TIP BRACKET PACKED WITH RANGE - SEE INSTALLATION INSTRUCTIONS.**
- **A CHILD OR ADULT CAN TIP THE RANGE AND BE KILLED.**
- **ENGAGE THE RANGE TO THE ANTI-TIP DEVICE - SEE INSTALLATION INSTRUCTIONS.**
- **RE-ENGAGE THE ANTI-TIP DEVICE IF THE RANGE IS MOVED.**
- **FAILURE TO DO SO CAN RESULT IN DEATH OR SERIOUS BURNS TO CHILDREN OR ADULTS.**

The following symbols are related to safety and are used on the product and throughout this manual.

Meaning / Description	Symbol
WARNING / CAUTION An appropriate safety instruction should be followed or caution taken if a potential hazard exists.	
DANGEROUS VOLTAGE To indicate hazards arising from dangerous voltages.	
PROTECTIVE EARTH (GROUND) To identify any terminal which is intended for connection to an external conductor for protection against electric shock in case of a fault, or the terminal of a protective earth (ground) electrode.	

Meaning / Description	Symbol
HEAVY This product is heavy and reference should be made to the safety instructions for provisions of lifting and moving.	
DISCONNECT MAINS SUPPLY Disconnect incoming supply before inspection or maintenance.	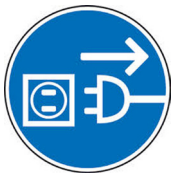

Contents

1. Important safety information 1

2. Range overview 5

Cooktop burners 5
Cleaning 6
The multifunction oven 7
Operating the oven 7
Steam 8
General oven tips 9
Accessories 10
Oven light 11
Storage 11

3. Oven cooking guide 12

4. Cleaning your range 14

Essential information 14
Control panel and oven doors 15

5. Troubleshooting 16

6. Installation Instructions 18

7. Service and parts 20

8. Installation safety instructions 21

9. Installation 23

Positioning the range 24
Moving the range 25
Removing the door 25
Lowering the two rear rollers 25
Leveling 26
Anti-tip device 26
Fitting the anti-tip device 26
Wall fixing 27
Installing the toe kick 27
Side panel extension kit *(optional extra)* 27

10. Gas connection 28

11. Electrical connection 30

12. Final fitting and checks 35

Fitting the drawer 36
Removing the drawer 36

13. Circuit diagram 37

14. Technical data 38

15. Warranty 39

1. Important safety information

Read all instructions before using this appliance. Save these instructions for future reference.

Have your appliance properly installed and grounded by a qualified technician. The installation must conform with local codes, or in the absence of local codes, in accordance with the National Fuel Gas Code, ANSI Z223. 1/NFPA 54 or, in Canada, the Natural Gas and Propane Installation Code, CSA B149. 1 and in addition the National Electrical Code NFPA 70 or the Canadian Electric Code, CSA C22. 1.

Install only as described in the installation section of this book.

Ask your dealer to recommend a qualified technician and an authorized repair service. Know how to disconnect the power to the range at the circuit breaker or fuse box in case of an emergency.

The anti-tip device supplied with this range must be installed when the appliance is installed. This will reduce the risk of tipping of the appliance from abnormal usage or by excessive loading of the oven door or storage drawer.

Leaning, sitting or stepping on the doors or drawer of this range can result in serious injuries and also cause damage to the range. **DO NOT** allow anyone to climb, stand or hang on any part of the range.

Important safety notice and warning

Prior to connection, the power cord should be inspected for any damage. In the event of damage please consult your electrical installer.

You must provide adequate clearances between the range and adjacent combustible surfaces. Refer to Installation Instructions.

Save the installation instructions for the local electrical inspector's use.

In case of fire

DO NOT use water on grease fires. NEVER pick up a flaming pan. Turn the controls off. Smother a flaming pan on a cooktop burner by covering the pan completely with a well fitting lid or baking tray. Isolate the power source, where it is safe to do so. If available, use a multipurpose dry chemical or foam-type fire extinguisher.

If the fire is in an oven pan, smother by closing the oven door. Open doors and windows, or if a hood is installed, turn it on to remove smoke and odor.

To prevent fire or smoke damage

Before using the range, make sure all the packing materials have been removed.

Always keep the area around the range free from combustible materials, gasoline, and other flammable vapors and liquids.

If the range is installed near a window, proper precautions should be taken to prevent curtains from blowing over the burners.

NEVER leave any items on the range cooktop. The hot air from an oven vent may ignite flammable items and may increase pressure in closed containers, which may cause them to burst. Many aerosol-type spray cans are EXPLOSIVE when exposed to heat and may be highly flammable. Avoid using or storing them near an appliance.

Many plastics will burn and most are damaged by heat. Keep plastic items away from parts of the range that may become warm or hot. **DO NOT** leave plastic items on the cooktop as they may burn, melt or soften if left too close to a vent or a lighted burner.

Storage should not be installed directly above a range. If anything is stored above the range, it should be limited to infrequently used items, which can be safely stored in an area subjected to heat from a range. Temperatures may be unsafe for some items such as volatile liquids, cleaners or aerosol sprays.

Destroy the carton and plastic bags after unpacking the range. **NEVER** allow children to play with packaging material.

NEVER use this appliance as a space heater to heat or warm the room. Doing so may result in carbon monoxide poisoning and overheating of the oven.

NEVER cover any slots, holes or passages in the oven bottom or cover an entire rack with materials such as aluminum foil. Doing so blocks airflow through the oven and may cause carbon monoxide poisoning. Aluminum foil linings may also trap heat, causing a fire hazard.

It is recommended that this appliance is serviced annually by a qualified service engineer.

DO NOT repair or replace any part of the appliance unless specifically recommended in this User Manual. Always consult a qualified service engineer.

All other servicing should be done only by a qualified technician, this may reduce the risk of personal injury and damage to the range.

NEVER modify or alter the construction of a range by removing leveling legs, panels, wire covers, anti-tip brackets/ screws, or any other part of the product.

DO NOT leave children alone.

Babies, toddlers and young children should not be allowed near the range at any time. They should **NEVER** be allowed to sit or stand on any part of the appliance.

DO NOT allow children to climb or play around the range. The weight of a child on an open door may cause the range to tip, resulting in serious burns or other injury.

Teach them not to play with controls or any other part of the range.

NEVER store items of interest to children in the cabinets above a range or on the backguard of a range; children climbing on the range to reach them could be seriously injured.

DO NOT use the oven for storage.

This instruction is based on safety considerations.

Flammable materials should not be stored in an oven, the range storage drawer or near the cooktop burners. This includes paper, plastic and cloth items, such as cookbooks, plastic ware and towels, as well as flammable liquids. **DO NOT** store explosives, such as aerosol cans, on or near the appliance.

Flammable materials may explode and result in fire or property damage.

To avoid the risk of electrical shock, personal injury, or death, make sure your range has been properly grounded and always disconnect it from the main power supply before servicing.

DO NOT touch cooktop burners or areas near burners.

Gas burners may be hot even if they have been off for some time. Areas near the gas burners may become hot enough to cause burns. During and after use, **DO NOT** touch, or let clothing touch or other flammable materials contact the burners or areas near the burners until they have had enough time to cool. These areas include the cooktop and rear vent.

DO NOT touch heating elements or interior surfaces of ovens.

Oven heating elements may be hot though they are dark in color. Interior surfaces of an oven may become hot enough to cause burns. During and after use, **DO NOT** touch, or let clothing or other flammable materials touch heating elements or interior surfaces of oven until they have had enough time to cool.

Other range surfaces that may become hot enough to cause burns are the broiler compartment and oven vent at the rear of the range.

Wear suitable clothing

NEVER wear loose-fitting or hanging clothes while using the range. Be careful when reaching for items stored in cabinets over the cooktop. Flammable material could be ignited if brought into contact with a burner flame or hot surface and may cause severe burns.

Use only dry potholders or oven gloves

Moist or damp potholders on hot surfaces may result in burns from steam. **NEVER** let a potholder touch hot heating elements.

DO NOT use a towel or other bulky cloth in place of a glove. They might catch fire if they touch a hot surface.

Use dry oven gloves when applicable – using damp gloves might result in steam burns when you touch a hot surface. **NEVER** operate the range with wet hands.

Important safety notice and warning

The California Safe Drinking Water and Toxic Enforcement Act of 1986 (Proposition 65) requires the Governor of California to publish a list of substances known to the State of California to cause cancer or reproductive harm, and requires businesses to warn customers of potential exposures to such substances.

This appliance contains or produces a chemical or chemicals which can cause death or serious illness and which are known to the state of California to cause cancer, birth defects or other reproductive harm.

Users of this appliance are hereby warned that the burning of gas can result in low-level exposure to some of the listed substances, including benzene, formaldehyde and soot, due primarily to the incomplete combustion of natural gas or liquid petroleum (LP) fuels. Properly adjusted burners will minimize incomplete combustion.

Exposure to these substances can also be minimized by properly venting with an open window or using a ventilation fan or hood.

To reduce the risk from substances in the fuel or from fuel combustion, make sure this appliance is installed, operated, and maintained according to the instructions in this booklet.

Conversion

This appliance is supplied set for Natural gas. A conversion kit for Propane gas is supplied with the range.

Be sure your range is correctly adjusted by a qualified service technician or installer for the type of gas (Natural or LP) that is to be used. See the Installation section of these instructions.

WARNING!
These adjustments must be made by a qualified service technician in accordance with the manufacturer's instructions and all codes and requirements of the authority having jurisdiction. Failure to follow these instructions could result in serious injury or property damage. The qualified agency performing this work assumes responsibility for the conversion.

User servicing

DO NOT repair or replace any part of the appliance unless specifically recommended in the manual. All other servicing should be referred to a qualified technician.

Cooktop burners

Quality of flames

On Natural Gas, the burners' flames should be a blueish color with, at most, a slightly yellowish fringe.

On Propane gas, the flames may be "softer". The cooktop burner flames may have a slightly yellowish tip.

If the flame burns with a long white tip, you should call for service.

If the flame is distorted, check that the burner head is correctly placed over the burner.

MAKE SURE THE FLOW OF COMBUSTION AND VENTILATION AIR TO THE RANGE IS UNOBSTRUCTED.

Use the right size pan

This appliance is equipped with burners of different sizes. Use utensils with flat bottoms. **DO NOT** use unstable pans and position the handles away from the edge of the cooktop. Make sure the flames are under the pans. It is unsafe to let the flames burn up the sides of the pan; the handle may get too hot.

A proper relationship between the utensil and burner will also improve efficiency.

NEVER leave cooktop burners unattended at high settings. Pans boiling over can cause smoking and greasy spills may catch on fire.

Protective Liners – DO NOT use aluminum foil to line cooktop bowls or oven bottoms. Foil liners may result in a risk of electric shock or fire and will damage the enamel finish. NEVER allow aluminum foil to contact the heating elements.

DO NOT use hotplate protectors, foil or hotplate covers of any description. These may affect the safe use of your hotplate burners and are potentially hazardous to health.

Glazed Cooking Utensils – Only certain types of glass, glass/ceramic, ceramic, earthenware, or other glazed utensils are suitable for range top use without breaking due to the sudden change in temperature.

Utensil handles should be turned inward and not positioned over adjacent burners. If handles are left over adjacent burners they will get hot and may burn.

Use of aluminum pans may cause metallic marking of the grates. This does not affect the durability of the enamel and may be cleaned off with a metal polish.

Ovens

Use care when opening the door.

Let hot air and steam escape before removing or replacing food.

NEVER heat unopened food containers. Pressure buildup may make the container burst and cause injury.

Keep oven vent ducts unobstructed.

Placement of oven racks

Always place oven racks in the desired location while the oven is cool. If the rack must be moved while the oven is hot, DO NOT let the potholder contact the hot heating element in the oven.

WARNING!THIS APPLIANCE IS PROVIDED WITH ROLLERS TO FACILITATE MOVEMENT DURING INSTALLATION. THE RANGE SHOULD NOT BE MOVED AFTER INSTALLATION.

General safety instructions

This appliance must be installed by a competent person in accordance with the installation instructions. The installation must comply with the relevant regulations and also the local electricity supply company requirements.

This appliance is designed for domestic cooking only. Use for any other purpose could invalidate any warranty or liability claim.

The use of a gas cooking appliance results in the production of heat and moisture in the room in which it is installed. Make sure that the kitchen is well ventilated: keep natural ventilation holes open or install a mechanical ventilation device, (mechanical extractor hood).

Prolonged intensive use of the appliance may call for additional ventilation, for example opening a window, or more effective ventilation, for example increasing the level of mechanical ventilation where present.

This appliance should not be installed with any ventilation system that blows air downward toward the gas cooking appliance. This type of ventilation system may cause ignition and combustion problems with the gas cooking appliance, resulting in personal injury or unintended operation. Ventilating systems that direct the air upwards can be used.

The range should be serviced by a qualified service engineer and only approved parts used. Have the installer show you the location of the range circuit breaker. Mark it for easy reference. Always allow the range to cool and then switch it off at the circuit breaker before cleaning or carrying out any maintenance work, unless specified otherwise in this guide.

All parts of the range become hot with use and will retain heat even after you have stopped cooking.

Take care when touching the range in order to minimize the possibility of burns; always be certain that the controls are in the OFF position and that it is cool before attempting to clean the range.

Clean with caution. If a wet sponge or cloth is used to wipe spills on a hot surface, be careful to avoid steam burns. Some cleaners can produce noxious fumes if applied to a hot surface.

Clean only parts listed in this guide.

In the interests of hygiene and safety, the range should be kept clean at all times as a build up of fats and other food stuff could result in a fire.

Always keep combustible wall coverings or curtains etc. a safe distance away from your range.

DO NOT spray aerosols in the vicinity of the range while it is in use.

DO NOT store or use combustible materials, or flammable liquids in the vicinity of this appliance.

Take great care when heating fats and oils, as they will ignite if they get too hot.

Use a deep fat thermometer whenever possible to prevent overheating fat beyond the smoking point.

NEVER leave a deep fry pan unattended. Always heat fat slowly, and watch as it heats. Deep fry pans should be only a maximum of one third full of fat. Filling the pan too full of fat can cause overspill when food is added. If you use a combination of oils or fats in frying, stir them together before heating, or as the fats melt.

Foods for frying should be as dry as possible. Frost on frozen foods or moisture on fresh foods can cause hot fat to bubble up and over the sides of the pan. Carefully watch for spills or overheating of foods when frying at high or medium high temperatures. **NEVER** try to move a pan of hot fat, especially a deep fry pan. Wait until the fat is cool.

When an oven is on, **DO NOT** use the top of the flue (the round holes along the back of the range) for warming plates, dishes, drying dish towels or softening butter.

When using an electrical appliance near the cooktop, be sure that the cord of the appliance does not come into contact with the cooktop.

Take care that no water seeps into the appliance.

Make sure that your kitchen is well ventilated at all times. Use extractor fans or hoods when installed.

The range is designed for cooking foods only and must not be used for any other purpose.

The oven should **NOT** be used for heating the kitchen, not only does this waste fuel but the control knobs may become overheated.

When the oven is on **DO NOT** leave the oven door open for longer than necessary.

The specification of this range should not be altered.

This appliance is heavy, take care when moving it.

When the range is not in use, ensure that the control knobs are in the OFF position.

2. Range overview

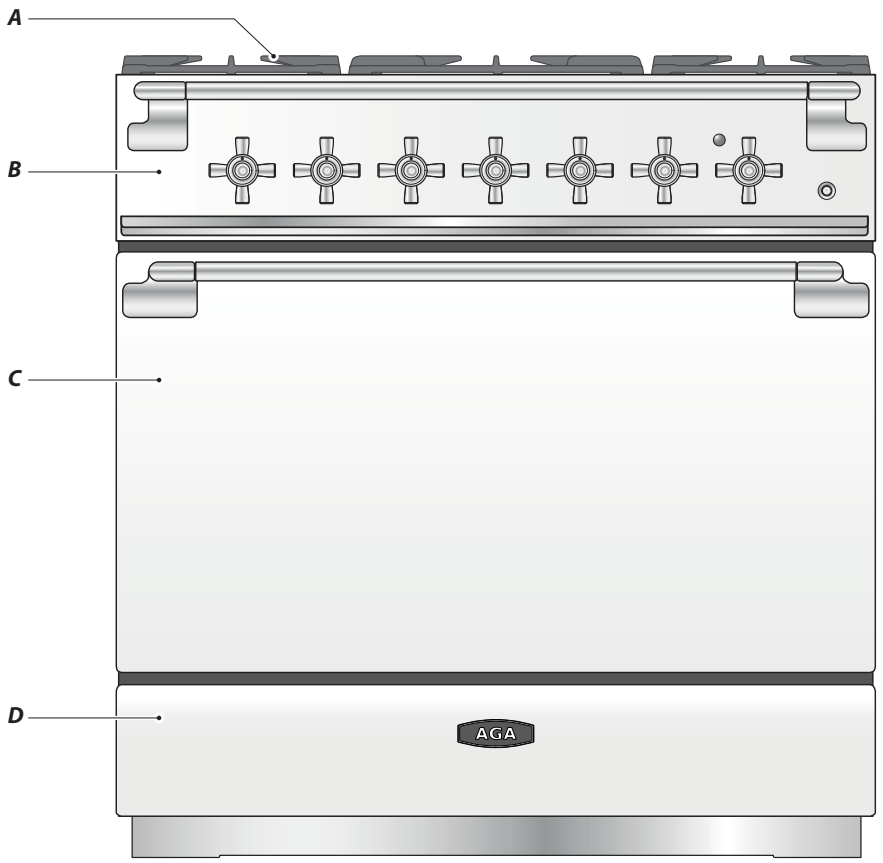

Fig. 2.1

The dual fuel single cavity range (**Fig. 2.1**) has the following features:

A. 5 hotplate burners

B. Control panel

C. Multifunction oven

D. Storage drawer

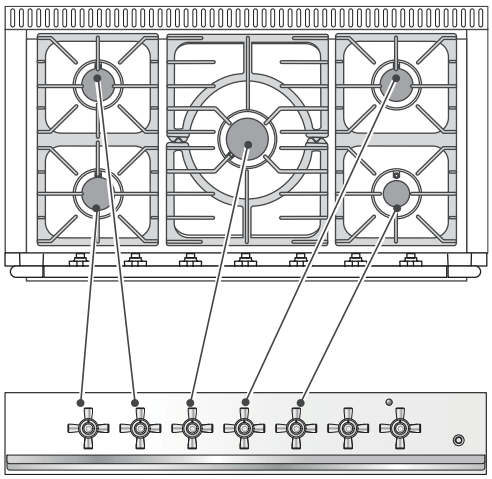

Fig. 2.2

Cooktop burners

Note: Before using the cooktop make sure all burners are in place and all the grates on the range are properly placed.

The drawing by each knob indicates which burner that knob controls (**Fig. 2.2**).

Each burner has a special Flame Supervision Device (FSD) that stops the flow of gas if the flame goes out.

To light a burner push in and turn the associated control knob to the high position as indicated by the large flame symbol (**Fig. 2.3**).

Keep holding the knob pressed in to let the gas through to the burner for about 4 seconds (**Fig. 2.3**). The igniter should spark and light the gas.

When a cooktop burner knob is pressed in, sparks will be made at every burner – this is normal. DO NOT attempt to disassemble or clean around any burner while another burner is on: an electric shock could result.

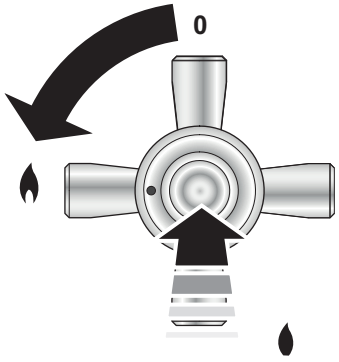

Fig. 2.3

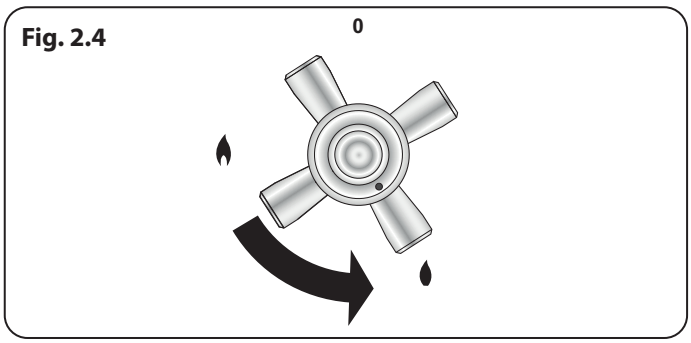

Fig. 2.4

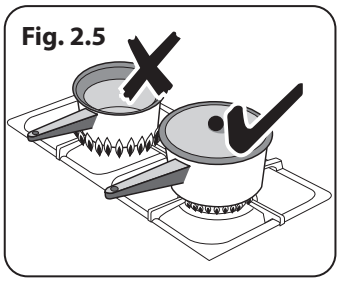
Fig. 2.5

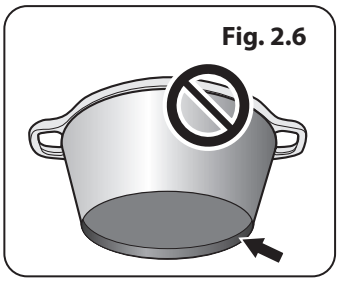
Fig. 2.6

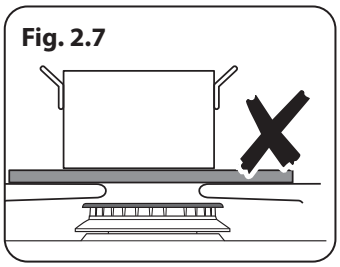
Fig. 2.7

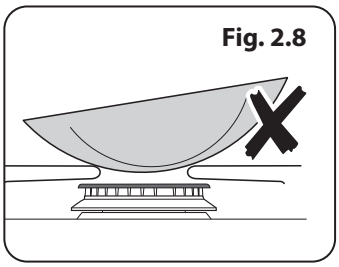
Fig. 2.8

If, when you let go of the control knob, the burner goes out, the safety device has not held in. Turn the control to the OFF position and wait one minute, then try again this time holding in the control knob for slightly longer.

Adjust the flame height to suit by turning the knob counter-clockwise (**Fig. 2.4**). On this range the low position is beyond high, not between high and off.

If after lighting, a cooktop burner's flame goes out, turn it off and leave it for one minute before relighting it.

Make sure flames are under the pans. For safety reasons, adjust the flames so that they **DO NOT** extend beyond the edge of the cooking utensil. This instruction is based on safety considerations (**Fig. 2.5**).

Pans and kettles with concave bases or down turned base rims should not be used (**Fig. 2.6**).

Simmering aids, such as asbestos or mesh mats, are NOT recommended. They will reduce burner performance and could damage the grates (**Fig. 2.7**).

Avoid using unstable or misshapen pans that may tilt easily and pans with a very small base diameter e.g. milk pans, single egg poachers (**Fig. 2.8**).

The minimum pan diameter is 6 ⅝" (160 mm). The maximum allowable pan base diameter is 10 ¼" (260 mm). Minimum size wok pan at top is diameter 13 3⁄16" (335 mm).

Igniting cooktop burners without electricity

If there is a power failure the cooktop burners can be lit with a match.

A. Hold a burning match ½" from the burner head, keeping your hand as far horizontally away from the burner as possible.

B. Push and turn the burner control knob to HI/lighting position. As soon as the burner flame lights move your hand away. With your other hand, keep holding the knob pressed for a few seconds so that the burner safety device can 'sense' the heat of the flame.

C. Turn the burner control knob to the OFF position when you have finished using it.

Cleaning

You can remove the burner head for cleaning; see the 'Cleaning your Range' section of these instructions.

Note: You should wipe the top surface of the range around the cooktop burners as soon as possible after spills occur.

Note: Use of aluminum pans may cause metallic marking of the grates. This does not affect the durability of the enamel and may be cleaned off with a metal polish.

The multifunction oven

IMPORTANT: Before using the oven for the first time, to dispel manufacturing odors, turn the oven to 200 °C (395 °F) in Convection Assisted mode and run for one hour. To clear the smell make sure the room is well ventilated to the outside air, by opening windows or turning on your ventilation hood.

During use the appliance becomes hot. Care should be taken to avoid touching the heating elements inside the oven.

The oven is a multifunction oven (**Fig. 2.9**). In addition to convection elements around the fans, it is fitted with extra heating elements, in the top of the oven and under the oven base. Take care to avoid touching the top elements when placing or removing items from the oven.

The multifunction oven has 3 main cooking functions, **convection**, **convection assisted** and **conventional cooking**. These functions should be used to complete most of your cooking.

The **browning element** and **warming** can be used in the latter part of the cooking process to fine-tune the results to your particular requirements.

Use **convection broiling** for all your broiling needs and **thaw and serve** to safely thaw small items of frozen food.

Table 2.1 gives a summary of the multifunction modes.

The multifunction oven has many varied uses. We suggest you keep a careful eye on your cooking until you are familiar with each function. Remember, not all functions will be suitable for all food types.

Please remember that all ranges vary – temperatures in your new ovens may differ to those in your previous range.

Operating the oven

The multifunction oven has two controls: a function selector and a temperature setting knob (**Fig. 2.10**).

Turn the function selector control to a cooking function. **Fig. 2.11** shows the control set for conventional oven cooking.

Turn the oven temperature knob to the temperature you need. The oven heating light will glow until the oven has reached the temperature you selected. It will then cycle on and off during cooking as the oven maintains the selected temperature (**Fig. 2.12**).

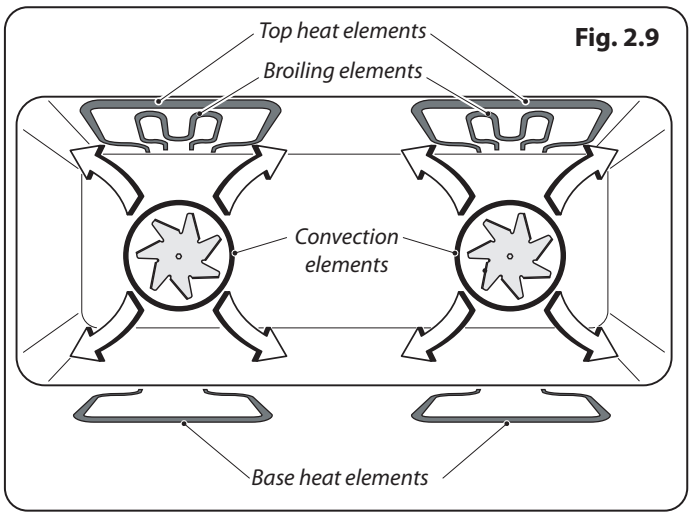

Fig. 2.9

Function	Use
Thaw & serve	To thaw small items in the oven without heat
Convection oven	A full cooking function, even heat throughout, great for baking
Convection broiling	Broiling meat and fish with the door closed
Convection assisted	A full cooking function good for roasting and baking
Conventional oven	A full cooking function for roasting and baking in the lower half of the oven
Broiling/Browning element	To brown and crisp cheese topped dishes and broiling meat
Warming	To crisp up the bases of quiche, pizza or pastry

Table 2.1

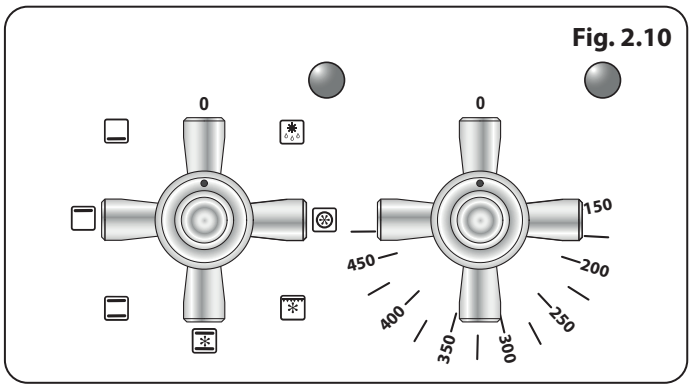

Fig. 2.10

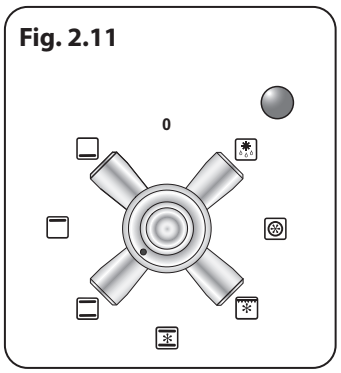

Fig. 2.11

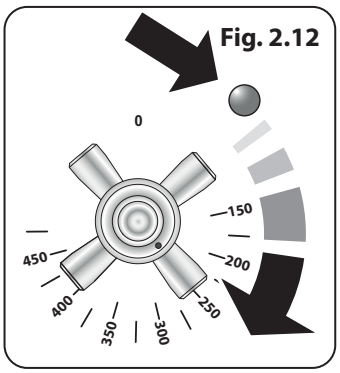

Fig. 2.12

Multifunction oven modes

Defrost

This function operates the fan(s) to circulate cold air only. Make sure the temperature control is at 0° and that no heat is applied. This enables small items such as desserts, cream cakes and pieces of meat, fish and poultry to be defrosted.

Thawing in this way speeds up the process and protects the food from contamination. Pieces of meat, fish and poultry should be placed on a rack, over a tray to catch any drips. Be sure to wash the rack and tray after thawing.

Thaw with the oven door closed.

Large items, such as whole chickens and meat roasts should not be thawed in this way. We recommend this be carried out in a refrigerator.

Thawing should not be carried out in a warm oven. Ensure that dairy foods, meat and poultry are completely thawed before cooking.

Convection oven

This function operates the fans and the heating element around them. The fans direct the heat around the oven so that an even heat is produced throughout, allowing you to cook large amounts quickly.

Convection oven cooking is particularly suitable for multi-rack cooking and is a good 'all-round' function. It may be necessary to reduce the temperature by approximately 10 °C (20 °F) for recipes previously cooked in a conventional oven.

If you wish to preheat the oven, wait until the indicator light has gone out before inserting the food.

To cook on 3 levels, use racks 1, 3 and 5. If required, you can uuse your broiler pan and rack as an extra level.

Convection broiling

This function operates the fan while the top element is on. It produces a more even, less fierce heat than a conventional broiler. For best results, place the food to be broiled, on the grid in the pan provided. Thick pieces of meat or fish are ideal for cooking in this way, as the circulated air reduces the fierceness of the heat from the broiler. The oven door should be kept closed while cooking is in progress, so saving energy. You will also find that the food needs to be watched and turned less than for normal broiling.

Rack levels 5 and 6 should be used depending on the size of the food being cooked. For best results we recommend that the grill pan is not located on the uppermost shelf.

Convection assisted oven

This function operates the fans, circulating air heated by the elements at the top and the base of the oven. The combination of fan and conventional cooking (top and base heat) makes this function ideal for cooking large items that need thorough cooking, such as a large meat roast. It is also possible to bake on two racks at one time using racks 2 & 4, although they will need to be changed over during the cooking time, as the heat at the top of the oven is greater than at the base, when using this function.

This is a fast intensive form of cooking; keep an eye on the food cooking until you have become accustomed to this function.

Conventional oven *(Top and Base Heat)*

This cooking function combines the heat from the top and base of the oven. The heat at the top of the oven is **greater** than the heat at the base, so the oven will be hotter in the top half than the lower half.

Unless you are cooking food that requires fast intensive cooking, we suggest you place it on a lower rack.

This cooking mode will take longer to preheat than convection mode. If you wish to cook one more than one rack at a time we recommend that you use the convection function for an even heat thoughout the oven.

Browning/Broiling Element

This function uses the inner sections of the elements in the top of the oven. It is a useful function for the browning or finishing of pasta dishes, vegetables in sauce or lasagne, the item to be browned being already hot before switching to the browning function.

Meat dishes can be broiled using the browning element, through the cooking should be closely monitored, as the heat at the top of the oven is greater than at the base when using this function.

Warming

This function uses the base element only. It will crisp up your pizza or quiche base or finish off cooking the base of a pastry case on a lower rack. It is also a gentle heat, good for slow cooking of casseroles in the middle of the oven or for plate warming.

The Browning and Warming functions are useful additions to your oven, giving you flexibility to finish off items to perfection. With use, you will soon realize how these functions can combine to extend your cooking skills.

Steam

When cooking foods with high water content (e.g. oven fries) there may be some steam visible at the grille at the rear of the cooktop. This is perfectly normal.

General oven tips

IMPORTANT: Before using for the first time, to dispel manufacturing odors turn the ovens to 200 °C (395 °F) in Convection Assisted mode and run for one hour. To clear the smell, make sure the room is well ventilated to the outside air, by opening windows for example.

Caution!
The inside door face is constructed with toughened safety glass. Take care not to scratch the surface when placing cookware on the glass panel.
DO NOT close the door against the oven racks. Accidental damage may cause the door glass panel to fracture.

The wire racks should always be pushed firmly to the back of the oven.

Bakeware and meat pans should be placed level centrally on the oven's wire racks. Keep all trays and containers away from the sides of the oven, as over browning of the food may occur.

Always place baking sheets with the widest part across the oven.

Cooking high moisture content foods can create a 'steam burst', when the oven door is opened. When opening the oven stand well back and allow any steam to disperse (**Fig. 2.13**).

When the oven is on, **DO NOT** leave the door open for longer than necessary, otherwise the knobs may get very hot.

Always leave a 'fingers width' between dishes on the same rack. This allows the heat to circulate freely around them.

Cover meat when cooking to avoid fat splashes.

To reduce fat splashing when you add vegetables to hot fat around a roast, dry them thoroughly or brush lightly with cooking oil.

If you want to brown the base of a pastry dish, preheat the baking sheet for 15 minutes before placing the dish in the center of the sheet or use the base heat in the Multifunction oven.

Where dishes may boil and spill over during cooking, place them on a baking sheet.

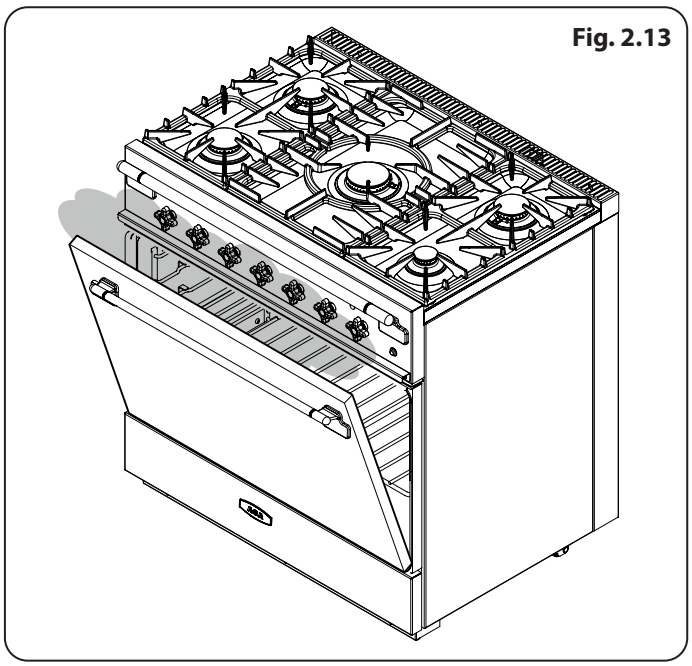

Fig. 2.13

Fig. 2.14

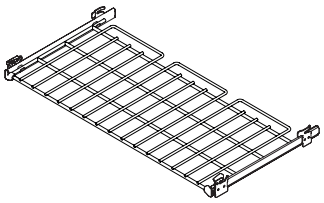

Fig. 2.15

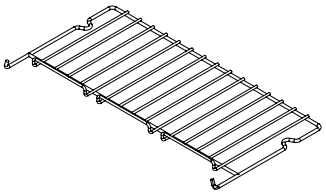

Fig. 2.16

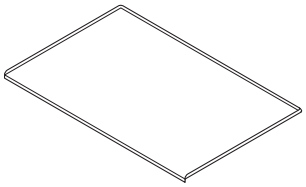

Fig. 2.17

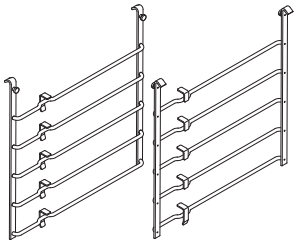

Fig. 2.18

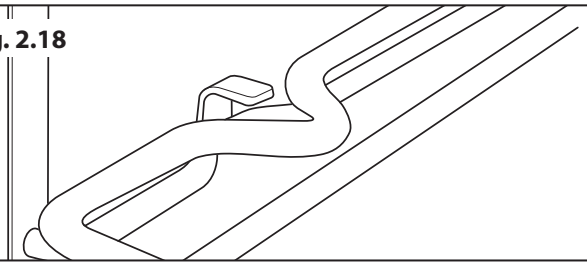

Fig. 2.19

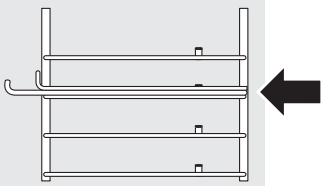

Fig. 2.20

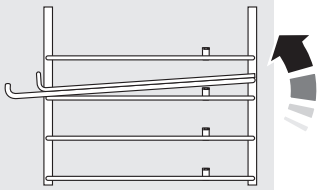

Fig. 2.21

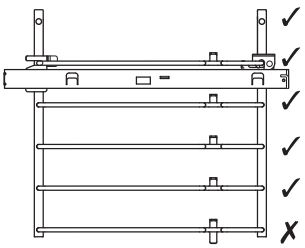

Fig. 2.22

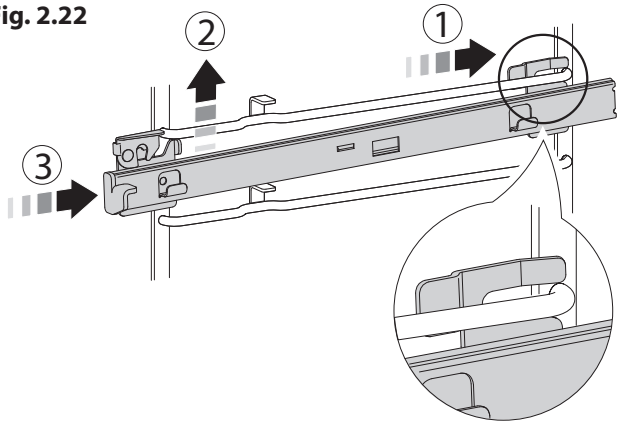

Accessories

Oven racks

The oven is supplied with:

- 2 telescopic racks with runners **(Fig. 2.14)**
- 1 flat rack (**Fig. 2.15**)
- 1 pastry tray **(Fig. 2.16)**
- 2 sets of ladder rack supports **(Fig. 2.17)**

The oven racks are retained when pulled forward but can be easily removed and refitted.

Racks

To remove and refit the rack

The rack has a small kink on either side (**Fig. 2.18**). To remove the rack, line these up with the stops in the rack support (**Fig. 2.19**). Lift the rack upwards so that it will pass over the rack stop and then pull it forwards (**Fig. 2.20**).

Refit in the reverse order, making sure to push it fully back.

To fit the telescopic rack runners

Please note that it is not possible to fit telescopic runners to the bottom rack support location (**Fig. 2.21**).

With the runner arm in the closed position locate the opening of the upper rear slot on the side support (**Fig. 2.22**). **DO NOT** locate any further than the opening at this point. Although not shown in (**Fig. 2.22**), fitting is the same for the upper stud type supports.

Lift the front of the runner arm to locate the front slot against the side support (**Fig. 2.22**).

Push the runner arm towards the rear of the oven. The catch at the front will lift and drop to secure the runner arm in place (**Fig. 2.22**).

To fit a rack to the telescopic rack runners

Slide the telescopic runners forward until they stop. Holding the rack above the runners, tilt the front downward and locate into the front of the runners. Lay the rack flat. Press on the rear of the rack to secure in place.

To remove a rack from the Telescopic rack runners

Slide the rack out on the runners. While holding one of the runners securely, carefully lift the rear of the rack upwards: the rack will spring clear of the central restraining tab. Repeat for the opposite side of the rack.

Note: To aid the removal of the rack, you can insert a suitable flat tool through the opening in the side of the runners and lever the rack clear (**Fig. 2.23**).

Tilt the front of the rack downwards and then lift clear of the runners (**Fig. 2.24**).

To remove the telescopic rack runners

Firstly, remove the rack as in the 'To Remove a Rack from the Telescopic Rack Runners' section.

Place a finger on the underside of the telescopic runner and lift.

Open the catch on top of the runner and pull the runner forward and down to remove.

To remove and refit the ladder rack supports

Lift the ladder support hooks out of the two locating holes in the oven side (or divider) before lifting the support clear of the bottom ladder restraint.

Refit by inserting the bottom of the ladder into the restraint before fitting the hooks through the locating holes.

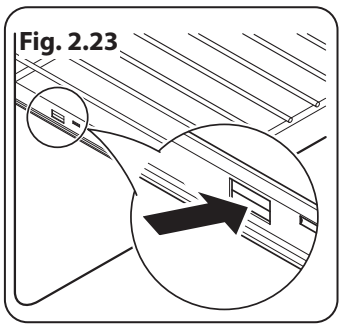

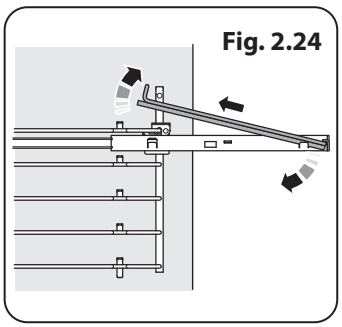

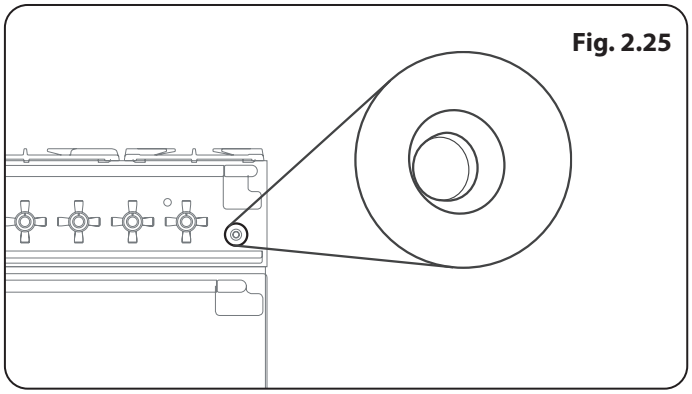

Oven light

Press the appropriate button to turn on the oven lights (**Fig. 2.25**).

If one of the oven lights fail, turn off the range circuit breaker before you change the bulb. See the 'Troubleshooting' section for details on how to change an oven light bulb.

Storage

The bottom drawer is for storing oven trays and other cooking utensils. The drawer can be removed completely for cleaning, etc.

⚠ **It can get very warm, so DO NOT store anything in it, which may melt or catch fire.**

⚠ **Never store flammable materials in the drawer. This includes paper, plastic and cloth items, such as cookbooks, plastic ware and towels, as well as flammable liquids.**

⚠ **DO NOT store explosives, such as aerosol cans, on or near the appliance.**

⚠ **Flammable materials may explode and result in fire or property damage.**

3. Oven cooking guide

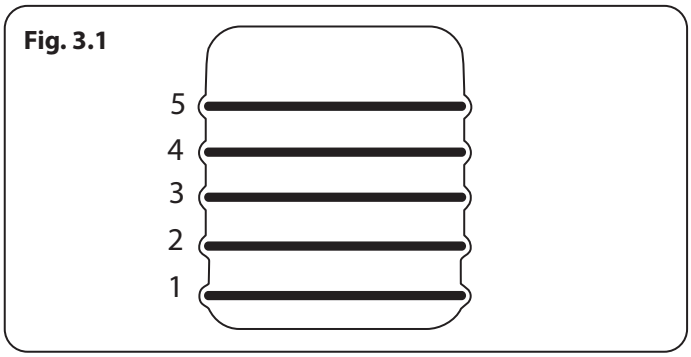

Fig. 3.1

Remember – not all modes will be suitable for all food types. The oven control settings and cooking times given are intended to be used only as a guide only. Individual tastes may require the temperature to be altered to provide a preferred result.

Food is cooked at a lower temperature in a convection oven than in a conventional oven. When using recipes, reduce the temperature by 20 °F (10 °C) and the cooking time by 5-10 minutes. The temperature in the convection oven is the same throughout ensuring uniform results.

Fig. 3.1 shows the shelf positions.

The racks should not be placed directly one above the other. When cooking on more than one rack always leave at least one runner space between them. Place baking sheets, individual cake tins or baking dishes centrally on the oven rack. For best results preheat the oven until the oven indicator light goes out.

For roast meats and poultry refer to the convection oven guide – reduce cooking time slightly.

The broiling / browning feature can be used on full power for browning or sealing items, or for toast. For meat dishes, the thicker the meat, the lower the temperature setting you should apply.

Make sure meat and poultry is fully cooked before serving.

Cooking chart

	Conventional oven Temperature °F	Rack position for conventional cooking	Convection oven Temperature °F	Approximate cooking time
Meat				
Beef (no bone)	300	2	300	30-35 minutes per 1 lb + 30-35 minutes
	375	2	375	20-25 minutes per 1 lb + 20-25 minutes
Lamb	300	2	300	30-35 minutes per 1 lb + 30-35 minutes
	375	2	375	20-25 minutes per 1 lb + 20-25 minutes
Pork & veal	300	2	300	35-40 minutes per 1 lb + 35-40 minutes
	375	2	375	25-30 minutes per 1 lb + 25-30 minutes
Poultry				
Chicken	300	2	300	20-25 minutes per 1 lb + 20-25 minutes
	375	2	375	15-20 minutes per 1 lb + 15-20 minutes
Turkey (slow cook)	300	2	300	25-30 minutes per 1 lb + 25-30 minutes
	375	2	375	20 minutes per 1 lb + 20 minutes
Turkey (fast cook)	300	2	300	20 minutes per 1 lb + 20 minutes
	375	2	375	15 minutes per 1 lb + 15 minutes
Duck/Duckling	300	2	300	20 minutes per 1 lb
Casserole	300	2	300	2-4 hours, according to recipe
Fish				
	350	2	350	Fillet 15-20 minutes; whole 15-20 minutes per 1 lb
	350	2	350	Whole 10 minutes per 1 lb + 10 minutes
	350	2	350	Steaks according to thickness
Desserts				
Cup cake	325	2	325	20 minutes
Scone	375	2	375	15 minutes
Deep apple pie	350	2	350	45 minutes
Plate tart	350	2	350	45 minutes
Fruit cake 8" x 3.5"	275	2	275	1¾-2 hours
Puff pastry	400	2	400	15-40 minutes according to size
Angel food cake	325	2	325	50-60 minutes
Brownies	350	2	350	25-30 minutes
Muffins	350	2	350	25-30 minutes
Cookies	350	2	350	15-20 minutes
Pound cakes	350	2	350	40-60 minutes
Bread	375	2	375	20-30 minutes

4. Cleaning your range

Part	*Finish*	*Recommended cleaning method*
Burner grates & top of burner heads	*Porcelain enamel*	*Mildly abrasive cleaner such as Bon Ami® or Soft Scrub®. Dishwasher*
Burner base	*Aluminum*	*As above*
Maintop top	*Stainless steel*	*Hot soapy water, non-abrasive cleaner, soft cloth*
Sides, toe-kick	*Stainless steel*	*As above*
Control panel	*Porcelain enamel or stainless steel*	*Non-abrasive cleaner, soft cloth*
Oven interior	*Porcelain enamel*	*Branded oven cleaner suitable for enamel surfaces such as Dawn Power Dissolver®. Take care not to damage the oven door seals*
Door handles	*Brushed nickel*	*Hot soapy water, soft cloth*
Oven racks & supports	*Chrome*	*Dishwasher. Hot soapy water & scouring pad*
Door inner	*Porcelain enamel*	*Mildly abrasive cleaner such as Bon Ami® or Soft Scrub® with a soft cloth.*
Door inner	*Glass*	*Hot soapy water, non-abrasive cleaner, if necessary*
Outer door & drawer	*Porcelain enamel or stainless steel*	*Multi-surface cleaner, soft cloth*
Control knobs	*Cast aluminum*	*Hot soapy water, non-abrasive cleaner, soft cloth*

Table 4.1

Essential information

Before thorough cleaning, turn off the circuit breaker. Allow the range to cool.

After cleaning remember to switch on the circuit breaker before using the range.

⚠ **Never use paint solvents, caustic cleaners, biological powders, bleach, chlorine based bleach cleaners, coarse abrasives or salt.**

⚠ **Do not mix different cleaning products – they may react together with hazardous results.**

Recommended cleaning materials are shown in **Table 4.1**.

Cleaning the range – Daily care

Cleaning the range is not a welcomed chore, but it has to be done to maintain efficiency and appearance. Remember it is better to wipe up any spills as they occur, this will prevent them burning on and becoming more difficult to remove later.

⚠ **Make sure the flow of combustion and ventilation air to the range is unobstructed – for example by build-up of fats or grease.**

If the flame is distorted, check that the burner head is correctly placed over the burner base (**Fig. 4.1**).

If the flame burns with a long white tip you should call for service.

Cleaning for spills

For spills and boil-overs that occur while cooking, as soon as possible turn off the burner and allow it to cool. Do not clean until the area is completely cooled down. Wipe up spills as soon as possible.

Do not allow surplus water to seep into the range.

Cooktop burners

The burner heads and caps can be removed for cleaning. Make sure they are absolutely dry before replacing.

When replacing burner head, ensure this locates properly within the base (**Fig. 4.2**). If you look at the bottom of the burner head you will see two 'pips'; these fit into the two notches in the burner base (**Fig. 4.3**).

Check burner ports are not blocked. If blockage occurs, remove stubborn particles using a piece of fuse wire.

Stainless steel main top

Lift away pots or pans from main top. Remove grates from spillage area and carefully place in a sink of warm soapy water. Wipe loose debris from main top. Avoid using any abrasive cleaners including cream cleaners on brushed stainless steel surfaces. For best results use a liquid detergent cleaner. Rinse with cold water and thoroughly dry with a clean, soft cloth. Make sure all parts are dry before repositioning.

Never use caustic or abrasive cleaners as these will damage the surface.

Control panel and oven doors

Avoid using any abrasive cleaners including cream cleaners, on brushed stainless steel surfaces. For best results use liquid detergents.

The control panel and control knobs should only be cleaned with a soft cloth wrung out in clean hot soapy water – but take care that no surplus water seeps into the appliance. Wipe with a clean dampened cloth then polish with a dry cloth. The oven doors should only be cleaned with a soft cloth wrung out in clean hot soapy water.

Fig. 4.1

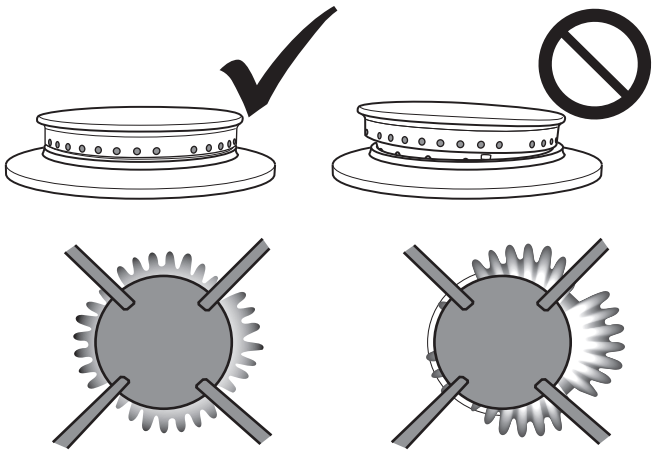

Fig. 4.2

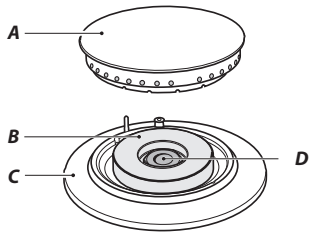

A – Burner head, B - Burner ring, C – Base, D – Venturi

Fig. 4.3

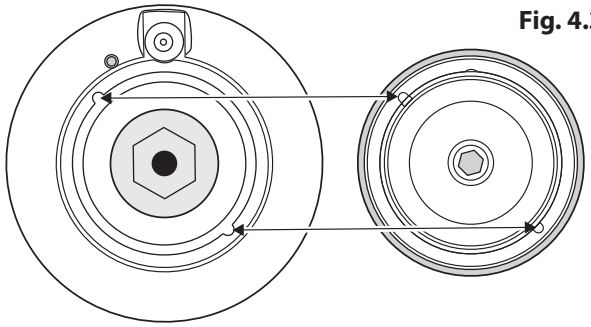

5. Troubleshooting

Cooktop ignition or cooktop burners faulty

Is the power on?

Are the sparker (ignition electrode) or burner holes blocked by debris?

Are the burner heads correctly located? See the section entitled 'Cleaning'.

Remember that each cooktop burner has a special safety device that stops the flow of gas if the flame goes out. When lighting a cooktop burner the safety device has to be overridden by holding in the control knob so that the gas can flow. This allows the flame sensor to heat up and operate the safety device. Keep holding the knob pressed in to let the gas through to the burner for few seconds. The igniter should spark and light the gas.

If, when you let go of the control knob, the burner goes out, the safety device has not held in. Turn the control to the OFF position and wait one minute, then try again this time holding in the control knob for slightly longer.

Cooktop burners will not light

If only one or all the cooktop burners will not light, make sure that the parts have been replaced correctly after wiping or removing for cleaning.

Check that there is not a problem with your gas supply. You can do this by making sure that other gas appliances you may have are working.

Do the burners spark when you push in the control knob? If not check the power is on.

Steam is coming from the oven

When cooking foods with a high water content (e.g. oven fries) there may be some steam visible at the rear grille. Take care when opening the oven door, as there may be a momentary puff of steam when the oven door is opened. Stand well back and allow any steam to disperse.

An oven fan is noisy

The sound of the oven fan may change as the oven heats up – this is perfectly normal.

What cleaning materials are recommended for the range?

See the 'Cleaning' section for a full list of recommended cleaning materials.

⚠ **We DO NOT recommend corrosive or caustic cleaners as these may damage your range.**

The knobs get hot when I use the oven, can I avoid this?

Yes, this is caused by heat rising from the oven, and heating them up. **DO NOT** leave the oven door open.

If there is an installation problem and I don't get my original installer to come back to fix it who pays?

You do. Service organizations will charge for their service if they are correcting work carried out by your original installer. It is in your interest to track down your original installer.

Food is cooking too slowly, too quickly, or burning

Cooking times may differ from your previous oven. Check that you are using the recommended temperatures and rack positions. See the oven cooking guide section of the instructions. The oven control settings and cooking times are intended to be used only as a guide. Individual tastes may require the temperature to be altered either way, to get the results you want. Try cooking at a higher temperature setting.

The oven is not cooking evenly

If you are cooking a large item, be prepared to turn it round during cooking.

If two racks are used, check that space has been left for the heat to circulate. When a baking sheet is put into the oven, make sure it is placed centrally on the rack.

Check that the door seal is not damaged.

A dish of water when placed on the rack should be the same depth all over. (For example, if it is deeper at the back, then the back of the range should be raised up or the front lowered.)

If the range is not level arrange for your supplier to level it for you.

Oven not coming on

Is the power on?

If not there may be something wrong with the power supply. Is the range supply on at the circuit breaker?

Have you set a cooking function?

Oven temperature getting hotter as the range gets older

If turning the knob down has not worked or only worked for a short time then you may need a new thermostat. This should be installed by a service technician.

Oven light is not working

The bulb has probably blown. You can buy a replacement bulb (which is not covered under the guarantee) from most electrical stores. Ask for a 40 W – 230 V halogen lamp (G9) (**Fig. 5.1**).

Turn off the power at the circuit breaker.

Before removing the existing bulb, turn off the power supply and make sure that the oven is cool. Open the oven door and remove the oven shelves.

Unscrew the bulb cover by turning it a quarter turn, counter-clockwise. It may be very stiff (**Fig. 5.2**).

Pull the existing bulb to remove it. When handling the replacement bulb, avoid touching the glass with your fingers, as oils from your hands can cause premature failure. Push, click in the replacement bulb.

Replace the bulb cover by turning it a quarter turn, clockwise. Turn on the circuit breaker and check that the bulb now lights.

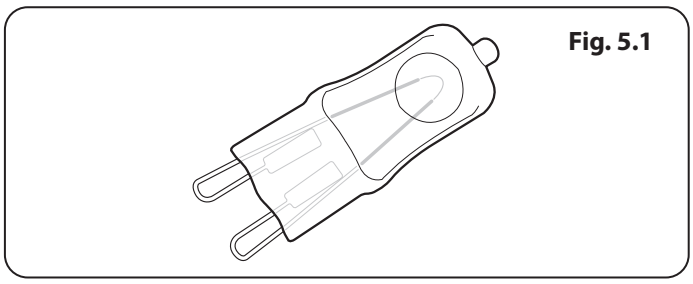

Fig. 5.1

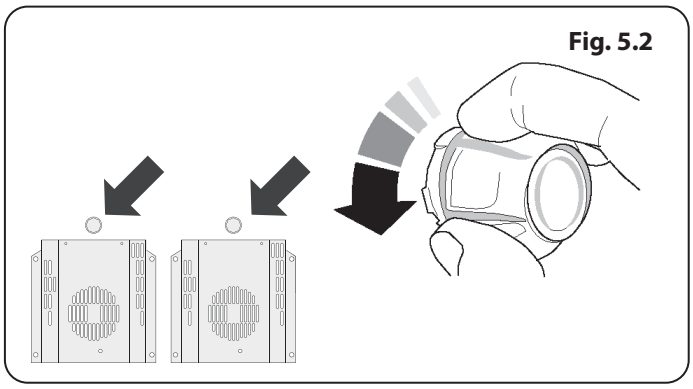

Fig. 5.2

6. Installation Instructions

WARNING!

If the information in these instructions is not followed exactly, a fire or explosion may result, causing property damage, personal injury or death.

DO NOT store or use gasoline or other flammable vapors and liquids in the vicinity of this or any other appliance.

WHAT TO DO IF YOU SMELL GAS

DO NOT try to light any appliance.

DO NOT touch any electrical switch.

DO NOT use any phone in your building.

Immediately call your gas supplier from a neighbor's phone. Follow the gas supplier's instructions.

If you cannot reach your gas supplier, call the fire department.

Installation and service must be performed by a qualified installer, service agency or the gas supplier.

WARNING!

The anti-tip device supplied with this range must be installed when the appliance is installed. This will reduce the risk of tipping of the appliance from abnormal usage or by excessive loading of the oven door.

⚠WARNING!

- **ALL RANGES CAN TIP. A CHILD OR ADULT CAN TIP THE RANGE AND BE KILLED.**
- **INSTALL ANTI-TIP BRACKET PACKED WITH RANGE - SEE INSTALLATION INSTRUCTIONS.**
- **A CHILD OR ADULT CAN TIP THE RANGE AND BE KILLED**
- **ENGAGE THE RANGE TO THE ANTI-TIP DEVICE - SEE INSTALLATION INSTRUCTIONS.**
- **RE-ENGAGE THE ANTI-TIP DEVICE IF THE RANGE IS MOVED.**
- **FAILURE TO DO SO CAN RESULT IN DEATH OR SERIOUS BURNS TO CHILDREN OR ADULTS.**

The following symbols are related to safety and are used on the product and throughout this manual.

Meaning / Description	Symbol
WARNING / CAUTION An appropriate safety instruction should be followed or caution taken if a potential hazard exists.	
DANGEROUS VOLTAGE To indicate hazards arising from dangerous voltages.	
PROTECTIVE EARTH (GROUND) To identify any terminal which is intended for connection to an external conductor for protection against electric shock in case of a fault, or the terminal of a protective earth (ground) electrode.	

Meaning / Description	Symbol
HEAVY This product is heavy and reference should be made to the safety instructions for provisions of lifting and moving.	
DISCONNECT MAINS SUPPLY Disconnect incoming supply before inspection or maintenance.	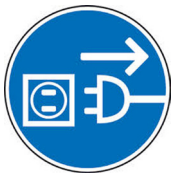

7. Service and parts

Firstly, please complete the appliance details below and keep them safe for future reference – this information will enable us to accurately identify the particular appliance and help us to help you. Filling this in now will save time and inconvenience if you later have a problem with the appliance. It may also be of benefit to keep your purchase receipt with this leaflet. You may be required to produce the receipt to validate a warranty field visit.

Dealer's Name and Address	
Name of Appliance	
Appliance Serial Number*	
Fuel Type	
Date of Purchase	
Installer's Name, Address and Telephone No.	
Date of Installation	

* This information is on the appliance data badge.

If you have a problem

In the unlikely event that you have a problem with your appliance, please refer to the rest of this booklet, especially the problem solving section, first to check that you are using the appliance correctly.

If you are still having difficulty, please contact Tech Support at 800.914.4799 or email techsupp@middlebyresidential.com.

Please note

For warranty information or to register your AGA range, email customersupport@middlebyresidential.com. You may also refer to the warranty document provided with the appliance or contact 888.845.4641 Option 3.

Out of warranty

We recommend that our appliances are serviced regularly throughout their life to maintain the best performance and efficiency. The frequency of service will depend on usage – for normal usage once a year should suffice. Service work should only be carried out by a suitably Authorized Person.

Spare parts

To maintain optimum and safe performance, we recommend that only genuine spare parts are used. **DO NOT** use re-conditioned or unauthorized controls. Contact 888.845.4641 Option 1 or email parts@middlebyresidential.com.

8. Installation safety instructions

Regulations

Installation of this range must conform with local codes, or in the absence of local codes, with the National Fuel Gas Code, ANSI Z223.1/NFPA.54, latest edition.

In Canada, installation must conform with the current Natural Gas Installation Code, CAN/CGA-B149. 1 or the current Propane Installation Code, CAN/CGA-B149.2, and with local codes where applicable.

In Canada, electrical grounding must be in accordance with the current CSA C22.1 Canadian Electrical Code Part 1 and/or local codes. See 'Electrical Connection' in this section.

CSA 1.1, latest edition and CAN/CGA-22.2 latest edition.

This range becomes hot in use, the cooktop burners produce exhaust gases.

IMPORTANT

Observe all governing codes and ordinances.

The range must be properly grounded.

This appliance is heavy. Ensure you have the correct facilities to complete the move. To find the weight of the appliance, refer to the "Technical data".

Refer to "Positioning the range".

Save these instructions for the local electrical inspector's use.

For your safety

DO NOT store or use combustible materials, gasoline or other flammable vapors and liquids in the vicinity of this or any other appliance.

If you smell gas,

- open windows.
- **DO NOT** touch electrical switches.
- Extinguish any open flame.
- Immediately call your gas supplier.

Improper installation, adjustment, alteration, service or maintenance can cause injury or property damage. Refer to this manual. For assistance or additional information, consult a qualified engineer.

NEVER reuse old flexible connectors. The use of old flexible connectors can cause gas leaks and personal injury. Always use NEW flexible connectors when installing a gas appliance.

IMPORTANT!

- Remove all packing material and literature from oven before connecting gas and electrical supply to range.
- Have your range installed by a qualified installer.
- **DO NOT** install your range on a substrate that cannot withstand 180 °F (82 °C).
- **DO NOT** install your range directly onto carpeting. Ensure an appropriate, non-combustible, substrate is installed prior to installing the range.
- Make sure the wall coverings around the range can withstand heat generated by the range up to 200 °F (93 °C).
- There must be a gap of at least 30" (762 mm) between the top of the range and any combustible surface above it.
- If a ventilating hood is installed above the range follow the installation instructions supplied with the hood.

This type of ventilation system may cause ignition and combustion problems with the gas cooking appliance, resulting in personal injury or unintended operation. Ventilating systems that direct the air upwards can be used.

Items of interest to children should not be stored above a range – children climbing on the range to reach items could be seriously injured.

Converting to propane gas

This appliance is supplied set for natural gas.

A conversion kit for Propane gas is supplied with the range **(A060048)**.

The conversion must be performed by a qualified LP gas installer.

⚠ **For installation 5000 ft above sea level, the appliance must be converted using high altitude kit A065744. Contact your distributor.**

Location of the range

The range may be installed in a kitchen/kitchen dining area but **NOT** in a room containing a bath or shower.

The range is freestanding and should not be placed on a separate base.

DO NOT locate the range where it may be subject to strong drafts. Any openings beneath the range or behind the range should be sealed.

The range should be positioned on a solid substrate.

⚠ **Your range is heavy DO NOT place on soft floor coverings, such as cushioned vinyl or carpeting.**

Use care when moving the range on cushioned vinyl or carpeted flooring.

When the floor covering ends at the front of the range, the area that the range will rest on should be built up to the same level or higher than the floor covering.

⚠ **Also, make sure your floor covering will withstand 180°F. (See the Installation Safety Instructions section).**

⚠ **(See the Installation Safety Instructions section).**

9. Installation

You will also need the following tools and equipment to complete the range installation satisfactorily.

1. Multimeter
2. Electric drill
3. Masonry drill bit & anchors (only required if installing the range on a stone or concrete floor)
4. Steel tape measure
5. Phillips head screwdriver
6. Flat head screwdriver
7. Allen keys (provided in pack)
8. Level
9. Open-end or adjustable wrench
10. Pencil and ruler
11. Pipe wrenches
12. 9⁄16" (13 mm) socket wrench

Additional materials you may need:

- Gas line shut-off valve.
- Pipe joint sealant or UL-approved pipe thread tape with Teflon* that resists action of natural and LP gases. *Teflon: Registered trademark of DuPont
- Flexible metal appliance connector (½" I.D.). A 5 foot length is recommended for ease of installation but other lengths are acceptable. **NEVER** use an old connector when installing a new range.
- Flare union adapter for connection to gas supply line (¾" or ½" NPT x ½" I.D.).
- Flare union adapter for connection to pressure regulator on range (½" NPT x ½" I.D.).

Checking the parts:

4 grates	2 x Telescopic rack with runners
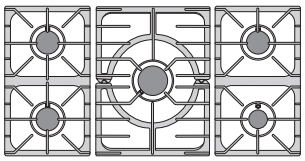	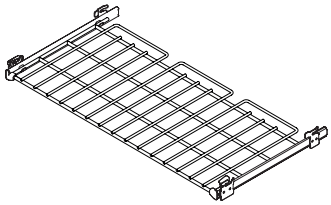
Rear Flue Grille	1 pastry tray
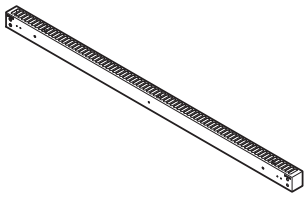	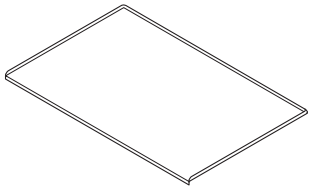
1 flat rack	Toe kick
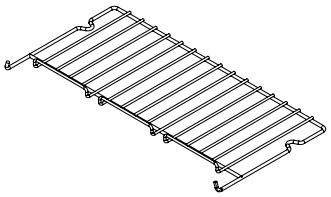	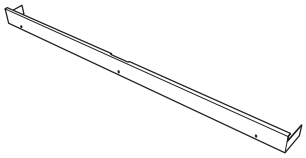
Anti-tip device	Conversion kit from natural gas to propane gas (kit number A060048)
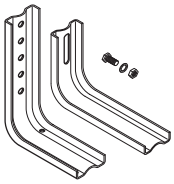	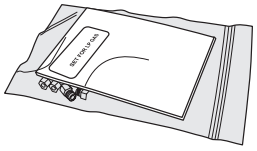
Handrail	Cooktop burner heads
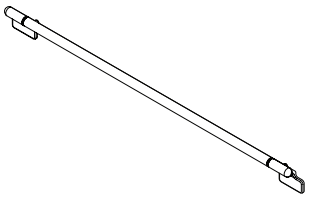	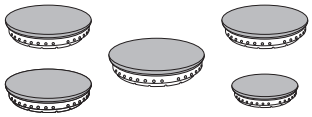

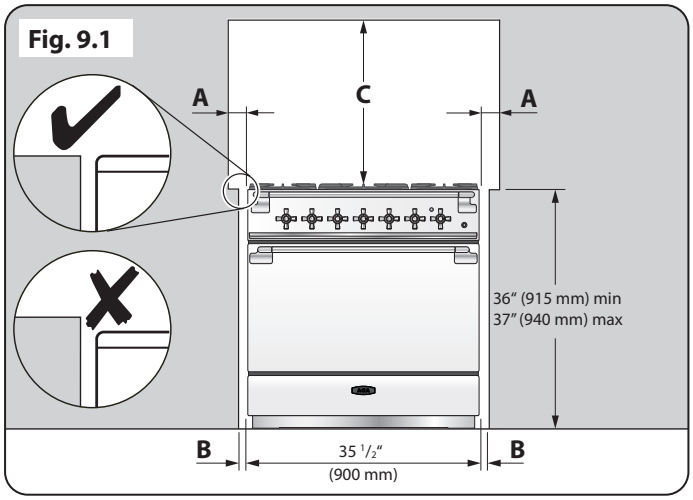

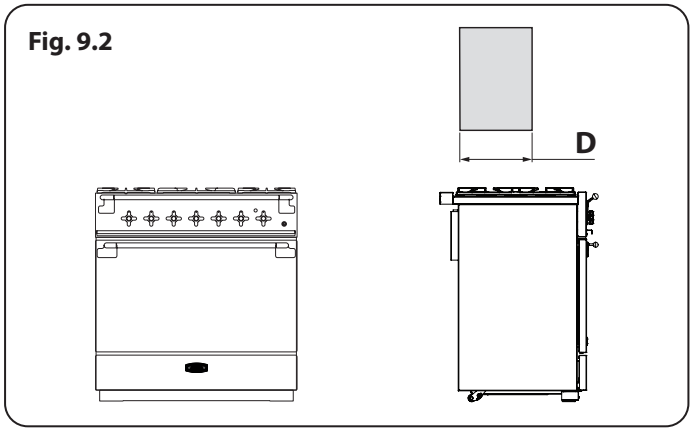

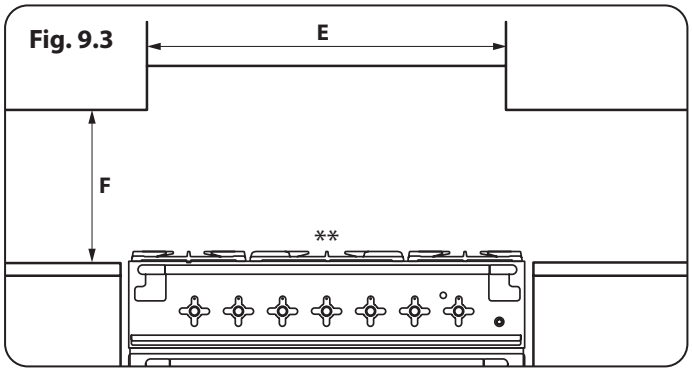

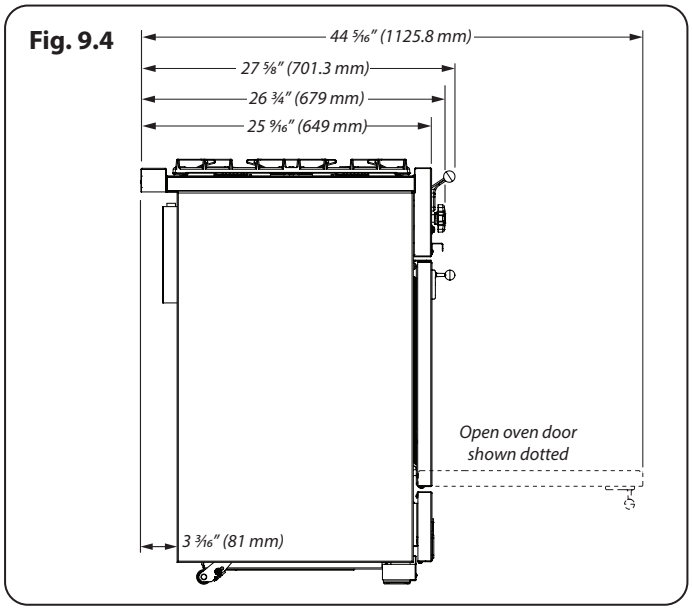

Positioning the range

Fig. 9.1, **Fig. 9.2** and **Fig. 9.3** show the minimum recommended distances and clearances from the range to nearby surfaces (see **Table 9.1**).

We recommend a gap of no more than 3/16" (5 mm) (see **Table 9.1**) either side of the appliance for moving the range. It must be possible to move the range in and out for cleaning and servicing.

Above hotplate surround should be level with, or above, any adjacent work surface (**Fig. 9.1**).

**Any rangehood should be installed in accordance with the hood manufacturer's instructions.*

***Any splashback must be fitted in accordance with the manufacturer's instructions. Allowance should be made for the additional height of the flue trim, which is fitted to the rangetop.*

Surfaces of furniture and walls at the sides and rear of the appliance should be heat, splash and steam resistant. Certain types of vinyl or laminate kitchen furniture are particularly prone to heat damage and discoloration.

We cannot accept responsibility for damage caused by normal use of the range to any material that de-laminates or discolors at temperatures less than 149°F/65°C above room temperature.

The depth of the range is 27 5/8" (701.3 mm) overall (**Fig. 9.4**).

For safety reasons, curtains must not be sited immediately behind the range.

Clearances to combustibles

Dimension	Description	USA	Canada
A	Gap between side of appliance and adjacent vertical surface ABOVE cooktop level	4 ½" (114 mm) ***1***	4 ½" (114 mm) ***1***
B	Gap between side of appliance and adjacent vertical surface BELOW cooktop level	3⁄16" (5 mm)	½" (12 mm)
C	Gap between cooktop level and any horizontal combustible surface	31 ½" (800 mm) ***2***	31 ½" (800 mm) ***2***
D	Maximum depth of cabinets installed above the top surface cooking sections	13" (330 mm)	13" (330 mm)
E	Minimum distance between horizontal surfaces less than dimension C	35 ½" (900 mm)	36 ⅜" (925 mm)
F	Minmum distance between horizontal cabinets and worktop surfaces adjacent to range	18" (458 mm)	18" (458 mm)
1 For non-combustible surfaces (such as unpainted metal or ceramic tiles) this gap is not required			
2 This dimension can be reduced to 24" (610 mm) if the bottom of the wooden or painted metal cabinet is preserved with a non-combustible material			

Table 9.1

Moving the range

On no account try and move the range while it is plugged into the electricity supply.

This appliance is heavy. Ensure you have the correct facilities to complete the move. To find the weight of the appliance refer to the "Technical data".

We recommend two people maneuver the range. Make sure that the floor covering is firmly attached, or removed to prevent it being disturbed when moving the range around.

To help you, there are two levelling rollers at the back, and two screw-down leveling feet at the front.

Remove the polystyrene base pack. From the front, tilt the range backwards and remove the front half of the polystyrene base **Fig. 9.5**. Repeat from the back and remove the rear half of the polystyrene base.

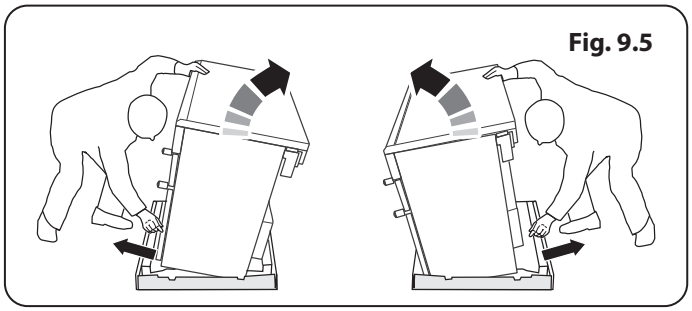
Fig. 9.5

Removing the door

Remove the oven door as follows: open the door fully. Swivel the locking 'U' clips forward to the locking position (**Fig. 9.6**). To remove the oven door, grip the sides of the door, lift upwards and then slide the door forwards (**Fig. 9.7**) and remove.

Door is very heavy - take care.

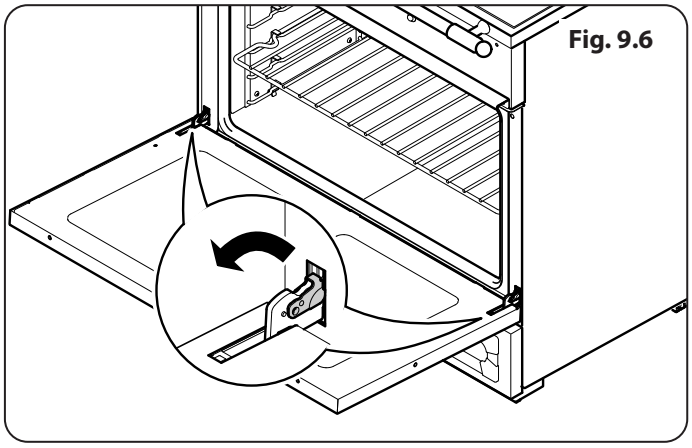
Fig. 9.6

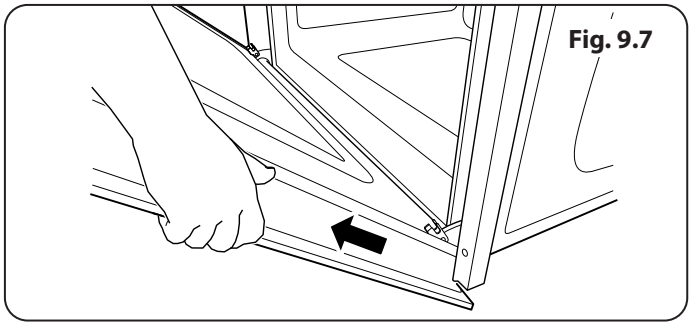
Fig. 9.7

Lowering the two rear rollers

To adjust the height of the rear of the range, first fit a 13 mm socket wrench onto the hexagonal adjusting nut **(Fig. 9.8)**. Rotate the nut – clockwise to raise – counter-clockwise to lower.

Make 10 complete (360°) turns clockwise. Make sure you lower **BOTH REAR ROLLERS**.

Unfold the rear edge of the cardboard base tray. Get a good grip on the top of the oven cavity panel as you move the oven. Carefully push the range backwards off the cardboard base. Remove the base tray.

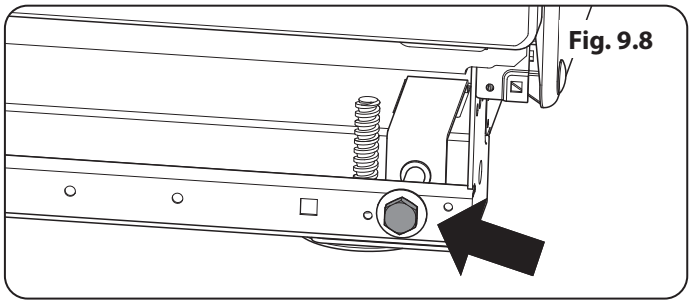
Fig. 9.8

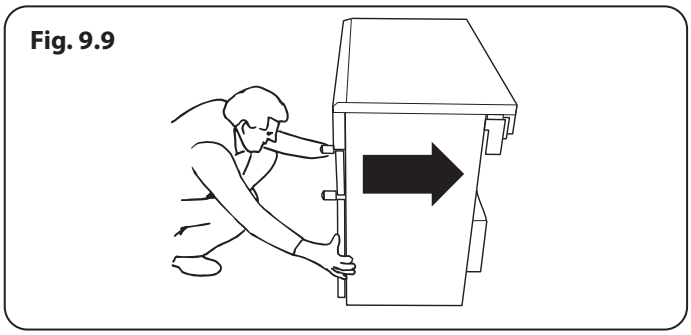
Fig. 9.9

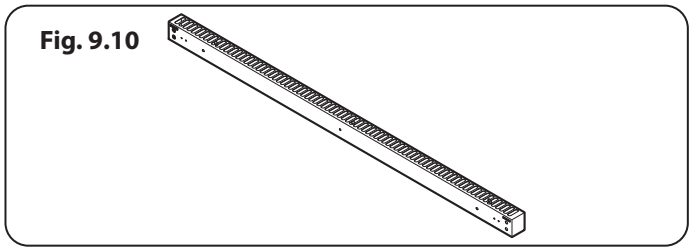
Fig. 9.10

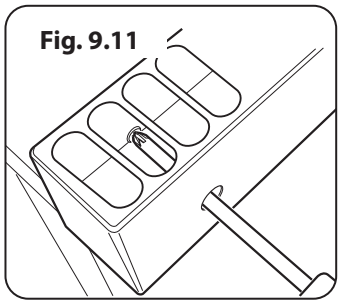
Fig. 9.11

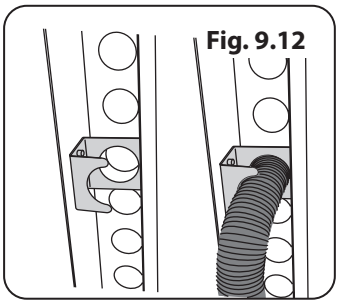
Fig. 9.12

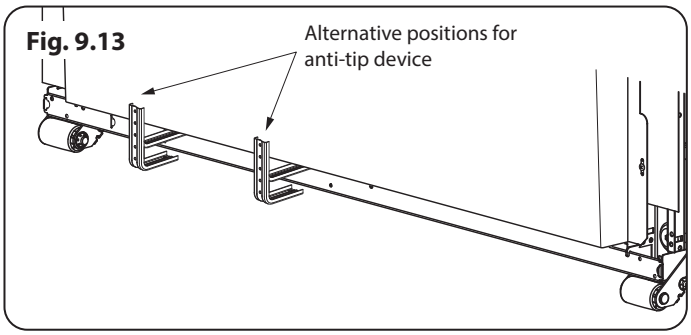

Fig. 9.13

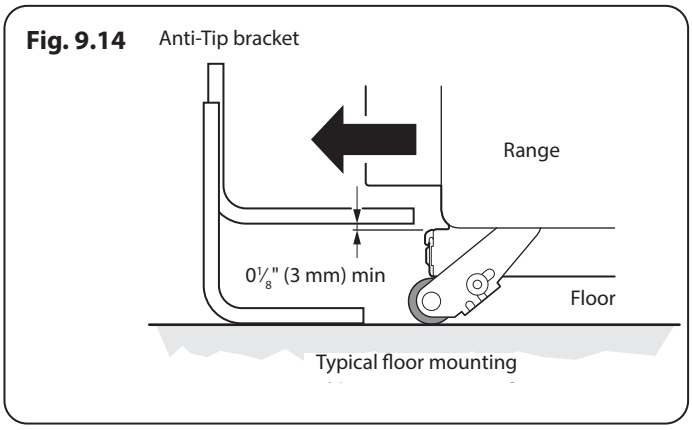

Fig. 9.14

Position the range close to its final position, leaving just enough space to get behind it (**Fig. 9.9**).

IMPORTANT: Remove all tape and packaging. Make sure the burner heads are properly seated and level. Take the accessory pack out of the oven. Check to be sure that no range parts have come loose during shipping.

Installing the flue grille

The flue grille is packed separately (**Fig. 9.9**).

The larger of the holes along the sides are for screwdriver access and should face to the rear. Use the screws and nuts supplied to hold the grille in place (**Fig. 9.10**).

Clip the flexible extension of the oven flue to the flue grille using the clip provided inside the flue grille (**Fig. 9.11**).

Leveling

It is recommended that you use a spirit level on a shelf in the oven to check the level.

Place the range in its intended position, taking care not to twist it within the gap between the kitchen units as damage may occur to the range or the units.

The front feet and rear rollers can be adjusted to level the range. To adjust the height of the rear of the range turn the adjusting nuts at the front bottom corners of the range.

Anti-tip device

NOTE: The range must be set to the correct height and leveled before the anti-tip bracket is installed.

Fitting the anti-tip device

A range using a flexible gas connector must be secured with a suitable anti-tip device.

A suitable anti-tip device is supplied and shown in **Fig. 9.12**.

When fitting the anti-tip bracket (**Fig. 9.13** and **Fig. 9.14**), adjust the bracket to give the smallest practicable clearance between the bracket and the engagement slot in the rear of the range.

Fit the bracket so that it engages as far as possible over the chassis of the range.

⚠ **DO NOT operate the range before the appliance is in its installed position and the anti-tip devices are engaged.**

⚠ **If the appliance is moved ensure that the anti-tip devices are re-engaged and the range has been returned to its original installed position.**

⚠ **DO NOT step, lean or swing on the range doors or drawer as this could tip the range and result in serious injury or death.**

Wall fixing

Where floor fixing is impractical and provided that the outer anti-tip bracket can be attached to a solid wall, the anti-tip device may be attached to a wall (**Fig. 9.15**). Make sure to use suitable screws and fixings.

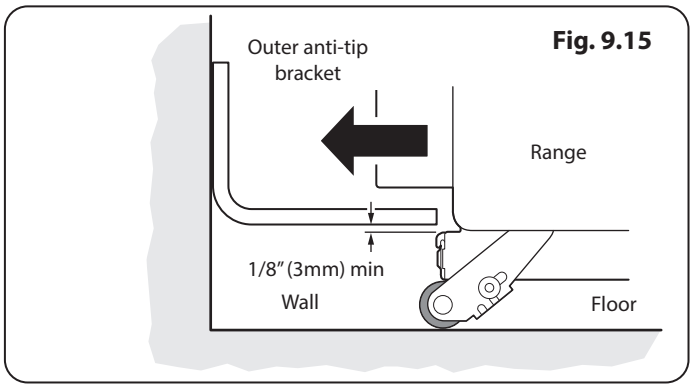

Fig. 9.15

Installing the toe kick

Remove the 3 screws for the toe kick mounts along the front bottom edge of the range (**Fig. 9.16**) Fasten the toe kick using these screws (alternative color screws can be found in the loose parts pack).

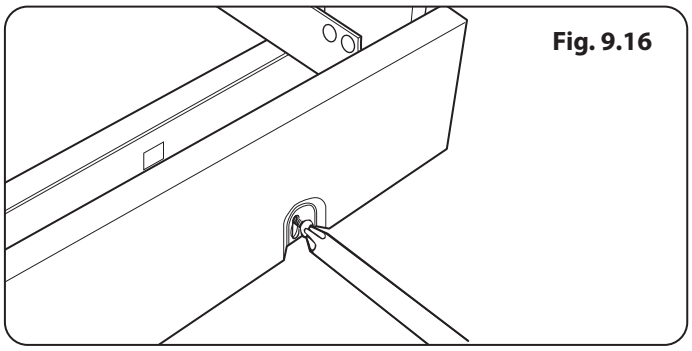
Fig. 9.16

Side panel extension kit *(optional extra)*

Two side extension panels are supplied with the range. These can be installed where the side of the range is exposed. The extension installation must be performed by a qualified gas installer, preferably during installation of the appliance (**Fig. 9.17**).

Kit Contents:

Side panel extension	2
M5 screw	4
M5 nut	4
Large washer	4
Shakeproof washer	4

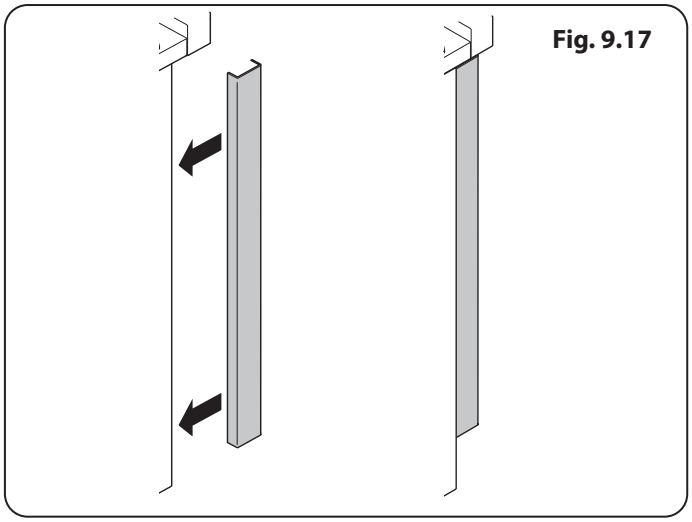
Fig. 9.17

Procedure

Place a screw and washer in the top hole in the rear edge of the range side panel. Add a shakeproof washer and start the nut on the screw threads so that the screw is loosely held in place. Repeat with the other hole (**Fig. 9.18**).

Slide the side extension in from the side behind the washers (**Fig. 9.19**).

Tighten the top and bottom screws to hold the side extension in place.

Reposition the range making sure the anti-tip device is re-engaged properly when the range is replaced. Failure to take this precaution could result in tipping of the range and cause injury.

NOTE: Check that the extension panel does not foul the mains lead or gas connection when the range is pushed back Reconnect the electricity supply.

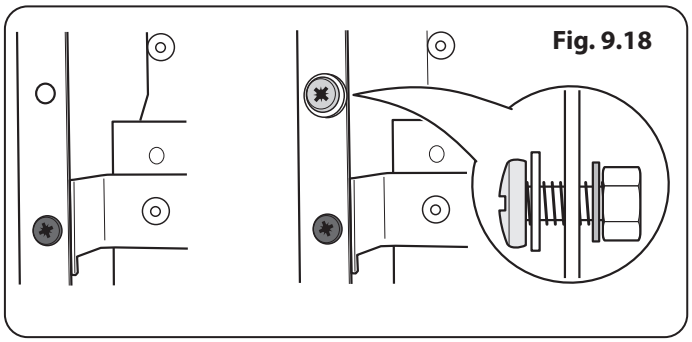
Fig. 9.18

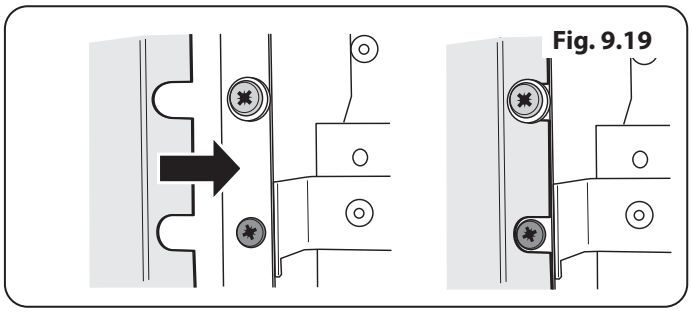
Fig. 9.19

10. Gas connection

Fig. 10.1

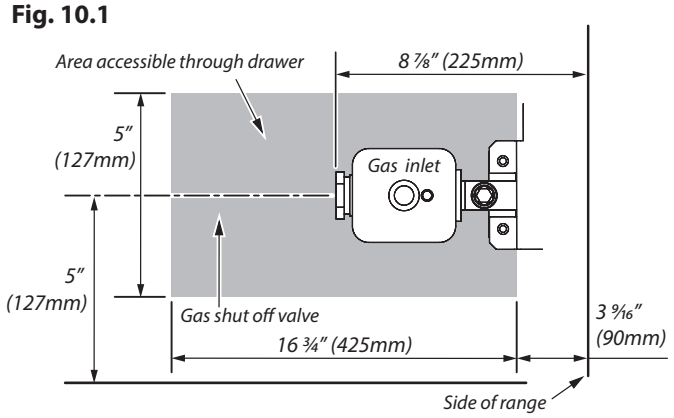

Fig. 10.2

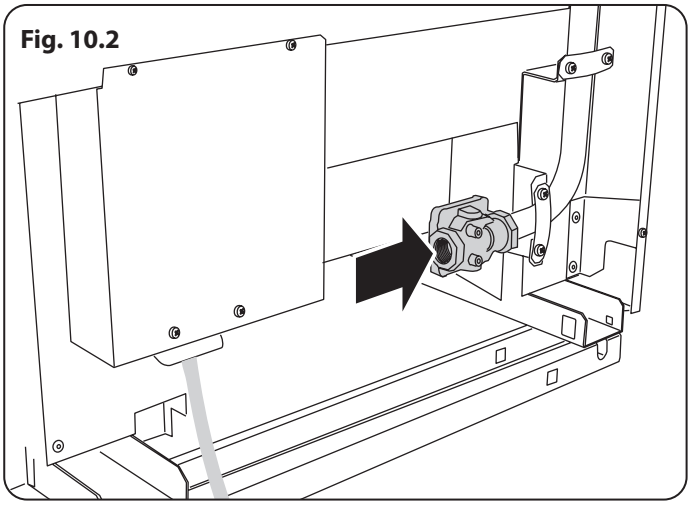

Installation of this range must conform with local codes or, in the absence of local codes, with the National Fuel Gas Code, ANSI Z223.1-latest edition.

In Canada

The range must be installed in accordance with the current CGA Standard CAN/CGA-B149 – Installation Codes for Gas Burning Appliances and Equipment and/or local codes.

In the Commonwealth of Massachusetts

This product must be installed by a licensed plumber or gas fitter when installed within the Commonwealth of Massachusetts.

A "T" handle type manual gas valve must be installed in the gas supply line to this appliance.

Gas supply requirements

Recommended gas pipe outlet locations are shown in **Fig. 10.1** and **Fig. 10.2**.

Provide adequate gas supply

Prior to installation, make sure that the local distribution conditions (nature of the gas and gas pressure) and the adjustment of the appliance are compatible.

A conversion kit for LP gas (Propane) is supplied with the range. When converted to LP gas, a pressure of 10" of the water column (2.49 kPa) is required.

Make sure you are supplying your range with the correct type of gas.

We recommend that the range be converted before installation. This must be done before the range can be used on LP gas.

For proper operation, the pressure of natural gas supplied to the regulator must be between 4½" and 13" of water column (1.12–3.24 kPa).

For LP gas, the pressure supplied must be between 10" and 13" of water column (2.49–3.24 kPa).

When checking for proper operation of the regulator, the inlet pressure must be at least 1" (0.25 kPa) above the manufacturer's specified manifold pressure.

The pressure regulator located at the inlet of the range manifold must remain in the supply line, regardless of whether natural or LP gas is being used.

A flexible metal appliance connector used to connect the range to the gas supply line should have an I.D. of ½" and be 5 feet in length for ease of installation.

Connect the range to the gas supply

Don't forget to relight the pilot on other gas appliances when you turn the gas back on.

Because hard piping restricts movement of the range, the use of a CSA International-certified flexible metal appliance connector is recommended unless local codes require a hard-piped connection.

The installation shall be made with a connector that complies with ANSI Z21.69.CSA 6.16 and using a quick disconnect device complying with ANSI Z21.41.CSA 6.9 (**Fig. 10.3**).

If disconnection of the restraint chain is necessary, ensure the restraint is reconnected when the appliance is returned to its original installed position.

NEVER If the hard piping method is used, you must carefully align the pipe; the range cannot be moved after the connection is made.

To prevent gas leaks, put pipe joint compound on, or wrap pipe thread tape with Teflon* around, all male (external) pipe threads.

A. Make sure everyone operating the range knows where and how to shut off the gas supply to the range.

B. Use a backup wrench on the regulator fitting to avoid damage. When installing the range from the front, remove the 90° elbow for easier installation.

C. Install male ½" or ¾" flare union adapters to the NPT internal thread of the manual shut-off valve, taking care to back up the shut-off valve to keep it from turning.

D. Position the range to permit connection at the shut-off valve.

When all connections have been made, make sure all range controls are in the off position and turn on the main gas supply valve. Use a liquid leak detector, specifically manufactured for leak detection, at all joints and connections (including the Pressure Test screw, see **Fig. 10.5** and **Fig. 10.6**) to check for leaks in the system.

⚠ **DO NOT use a flame to check for gas leaks.**

When using test pressures greater than ½ psig (3.5 kPa) to pressure test the gas supply system of the residence, disconnect the range and individual shut-off valve from the gas supply piping. When using test pressures of ½ psig (3.5 kPa) or less to test the gas supply system, simply isolate the range from the gas supply system by closing the individual shut-off valve.

Flexible Connector

Installer: Inform the consumer of the location of the gas shut-off valve (**Fig.10.4**).

Fig. 10.3

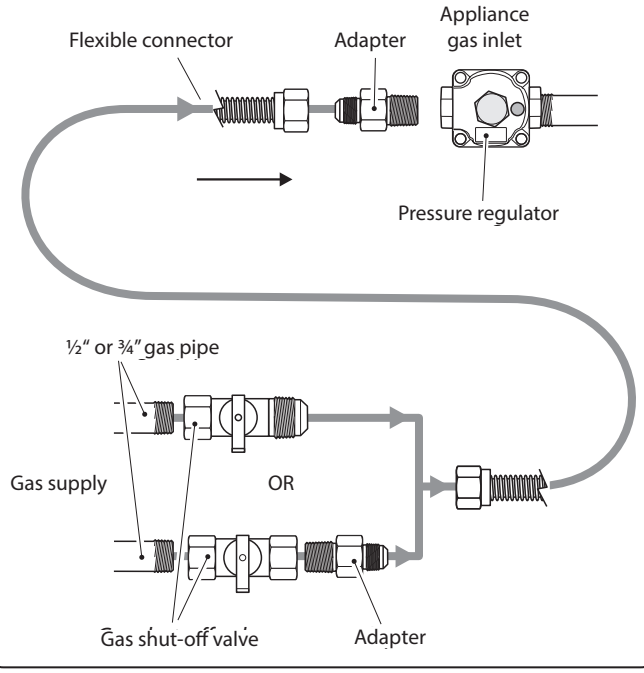

Fig. 10.4

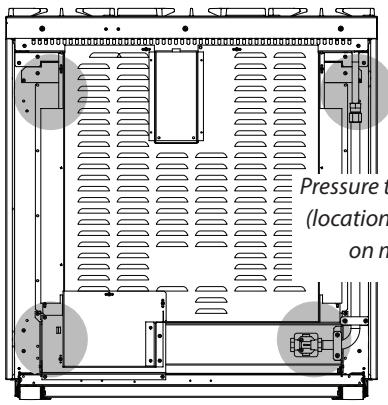

Fig. 10.5

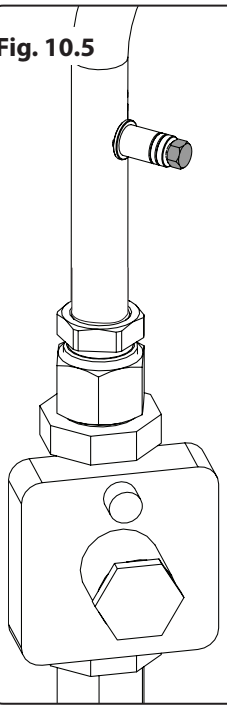

Fig. 10.6

* Teflon: Registered trademark of DuPont

11. Electrical connection

Have your appliance properly installed and grounded by a qualified technician. The installation must conform with local codes, or in the absence of local codes, in accordance with the National Fuel Gas Code, ANSI Z223.1/NFPA 54 or, in Canada, the Natural Gas and Propane Installation Code, CSA B149.1 and in addition the National Electrical Code NFPA 70 or the Canadian Electric Code, CSA C22.1.

Electrical requirements

For personal safety, DO NOT use an extension cord with this appliance. Remove the house fuse or open the circuit breaker before beginning installation.

WARNING Electrical Grounding Instructions. This appliance is shipped with a (four-prong) grounding plug for your protection against shock hazard and should be plugged directly into a properly grounded receptacle. DO NOT cut or remove the grounding prong from this plug.

Prior to connecting the power cord to the wall socket, inspect the cable for any damage that may have occurred. In the event of damage please consult your electrical installer.

Ensure that the power cord is routed so that it cannot become damaged during the installation.

This appliance must be supplied with the proper voltage and frequency, and connected to an individual, properly grounded branch circuit, protected by a circuit breaker or time-delay fuse, as noted on the rating plate.

Wiring must conform to National Electric Codes. If the electric service provided does not meet the above specifications, have a licensed electrician install an approved outlet.

Because range terminals are not accessible after the range is in position, flexible service conduit or cord must be used.

Provide proper electrical supply

This range must be supplied with 240 V 60 Hz, and connected to an individual, properly grounded branch circuit protected by a circuit breaker or time-delay fuse. If the electrical service provided does not meet the above specifications, it is recommended that a licensed electrician install an approved outlet.

Connecting using the supplied cord and plug

Your range is shipped with a 4-prong NEMA 14-50P plug to be used in a NEMA 14-50R receptacle.

Recommended electrical outlet location

When connecting using a NEMA 14-50R receptacle, if possible position it so it can be accessed through the opening at the rear of the drawer cavity (**Fig. 11.1**). Alternate location within the shaded area in (**Fig. 11.2**). The distance between the back of the range and the wall is approximately 4" (10.6 cm).

Plug the range power cord into a properly grounded wall receptacle.

DISCONNECT THE ELECTRICAL SUPPLY.

Connecting if the supplied cord and plug is not suitable.

To remove the electrical connection cover, first remove the screws on the top and bottom edges. The cover has two side and one bottom location tags (**Fig. 11.3**).

Slide the cover down to free the side tags (**Fig. 11.4**).

On refitting, ensure the cover is correctly located on the tab on the bottom flange.

Fig. 11.1

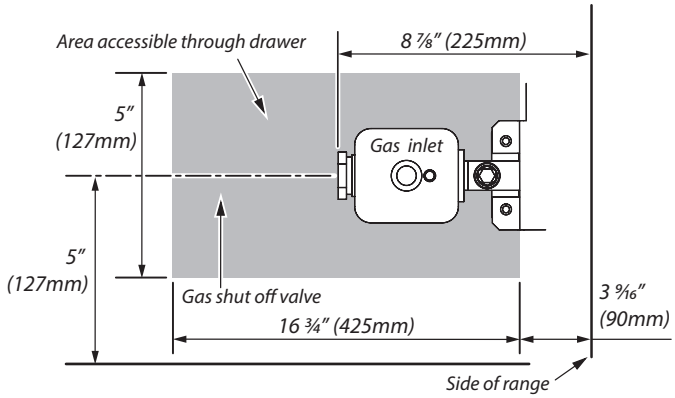

Fig. 11.2

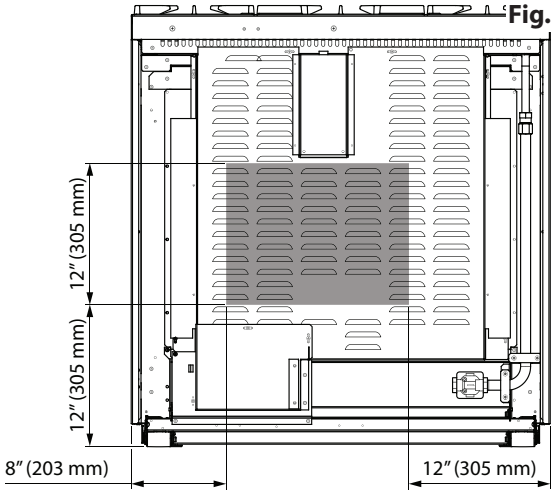

Fig. 11.3

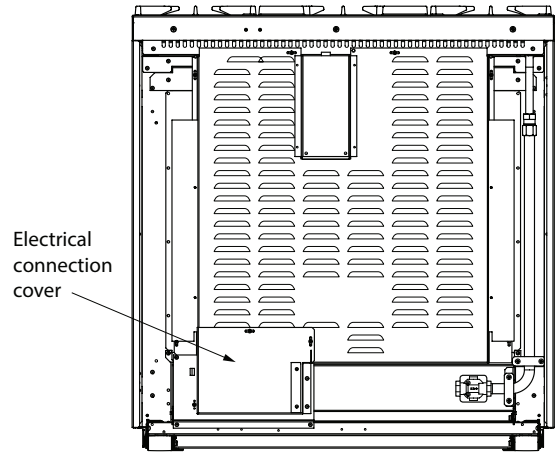

Fig. 11.4

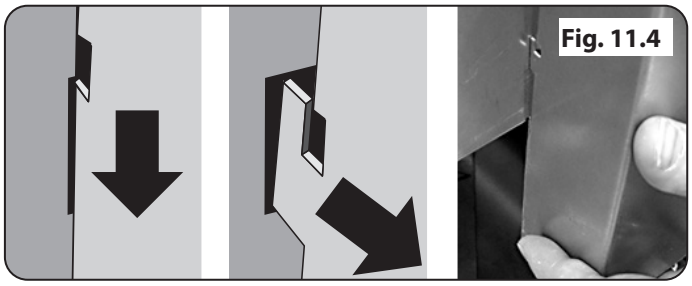

Fig. 11.5

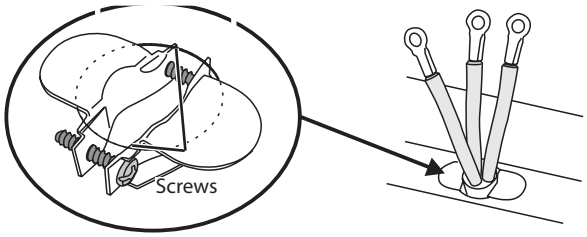

Fig. 11.6

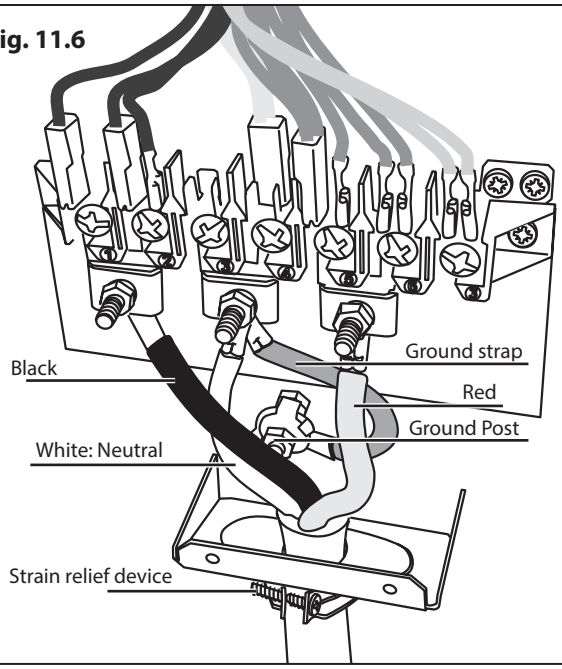

Fitting a 3-Wire Power Cord

Disconnect the supplied power cord from the terminal block and ground post. Keep the terminal block parts; you will need them. Slacken the strain relief clamp from the power cord, untighten the 2 screws (**Fig. 11.5**) and remove the power cord.

Insert the new power cord through the strain relief device but do not tighten the device yet.

⚠ **Your range is supplied with a ground strap that can be used when connecting to a three wire cord. Consult your electrician before changing the supplied cord kit.**

Fit the Ground strap to the ground and center terminal of the connector block (**Fig. 11.6**).

The neutral or ground wire of the power cord must be connected to the neutral terminal located in the center of the connector block. The power leads must be connected to the outside terminals (**Fig. 11.6**).

Make sure the connections are tight. Now tighten the strain relief device to clamp the power cord.

Refit the electrical connection cover.

3-Wire Conduit Installation

Disconnect the supplied power cord from the terminal block and ground post. Keep the terminal block parts; you will need them. Remove the strain relief clamp from the power cord and remove the power cord and strain relief clamp from the mounting bracket.

The range is shipped with reducer plates to give a 1 ⅛" diameter opening for conduit connection (**Fig. 11.7**). Find the reducer plates (**Fig. 11.8**) in the conversion kit and fit them to the mounting bracket.

Fit a squeeze connector (not supplied with the range), to your conduit. Insert the conduit through the reducer plates on the mounting bracket. Allow enough slack to easily attach the wires to the terminal block (**Fig. 11.7**).

NOTE: Do not install the conduit without a squeeze connector.

A Ground strap is supplied in the conversion pack (**Fig. 11.9**). Fit the Ground strap to the ground and center terminal of the connector block.

The neutral or ground wire of the power cord must be connected to the neutral terminal located in the center of the connector block. The power leads must be connected to the outside terminals (**Fig. 11.10**).

NOTE: Make sure the wires are completely inserted into the terminals and secure connections are made.

Secure the squeeze connector in place in the bracket by tightening the squeeze connector screws.

Refit the electrical connection cover.

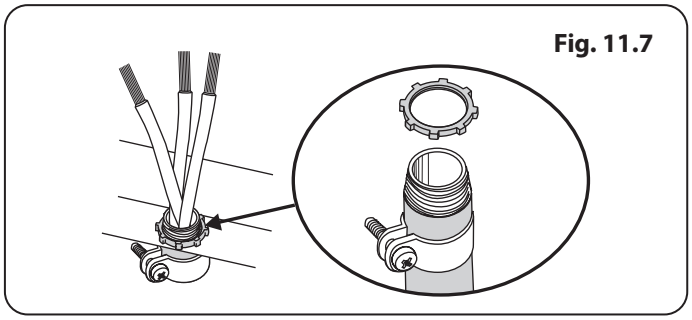

Fig. 11.7

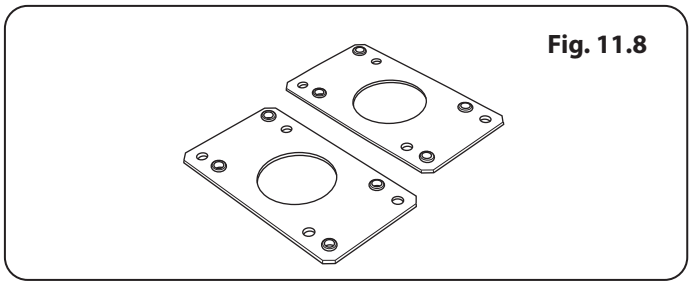

Fig. 11.8

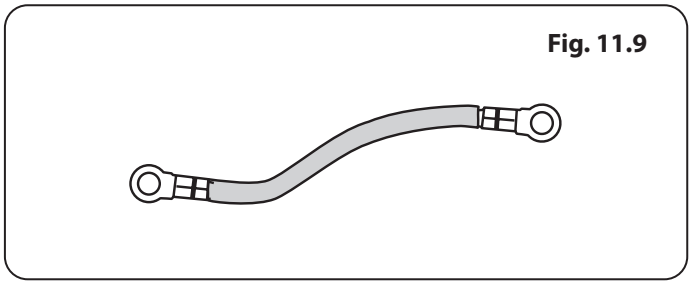

Fig. 11.9

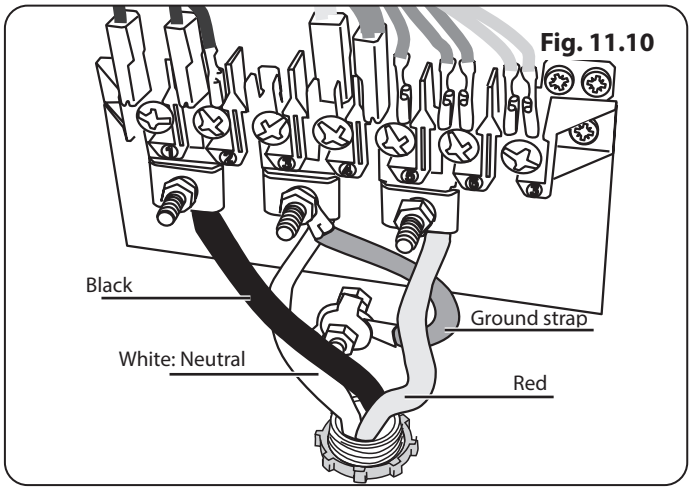

Fig. 11.10

Fig. 11.11

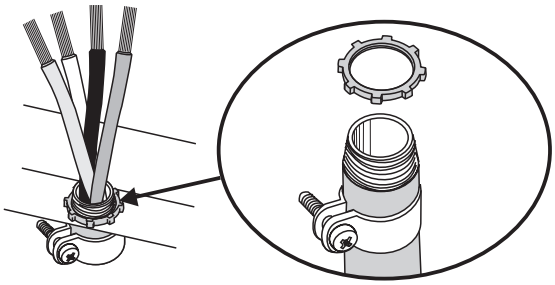

Fig. 11.12

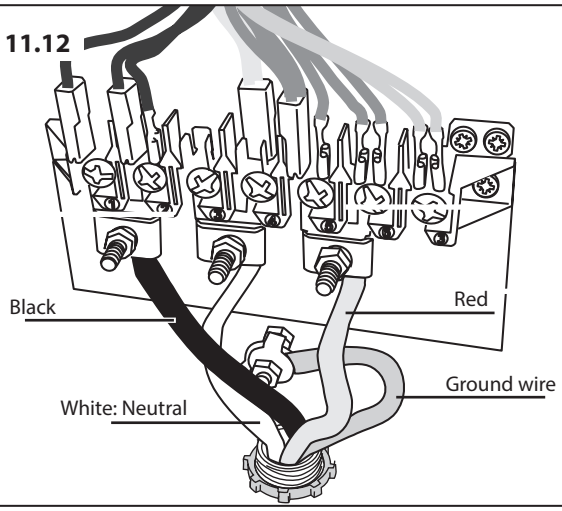

4-Wire Conduit Installation

Disconnect the supplied power cord from the terminal block and ground post. Keep the terminal block parts; you will need them. Remove the strain relief clamp from the power cord and remove the power cord and strain relief clamp from the mounting bracket (**Fig. 11.11**).

The range is shipped with reducer plates to give a 1 ⅛" diameter opening for conduit connection (**Fig. 11.7**). Find the reducer plates (**Fig. 11.8**) in the conversion kit and fit them to the mounting bracket.

Fit a squeeze connector (not supplied with the range), to your conduit. Insert the conduit through the reducer plates on the mounting bracket. Allow enough slack to easily attach the wires to the terminal block.

NOTE: Do not install the conduit without a squeeze connector.

Fit the wires to the ground post and terminal block (**Fig. 11.12**)

NOTE: Make sure the wires are completely inserted into the terminals and secure connections are made.

Secure the squeeze connector in place in the bracket by tightening the squeeze connector screws.

Refit the electrical connection cover.

Seal the Openings

Seal any openings in the wall behind the range and in the floor under the range when hookups are completed.

When all Connections are Completed

MAKE SURE THE FLOW OF COMBUSTION AND VENTILATION AIR TO THE RANGE IS UNOBSTRUCTED.

12. Final fitting and checks

Fitting the handrail

1. Using the 2 mm Allen key supplied, loosen the two retaining screws in the base and side of the handrail support. Fit the handrail support onto the locating bosses on the fascia (**Fig. 12.1**).

NOTE: The handle support should face upwards.

2. Push the support back against the fascia and tighten the one retaining screws. Repeat for the other side. Check that each support is secure.
3. Locate the handrail onto the support tabs and, using the 3 mm Allen key supplied, tighten the one retaining screws in the bottom to secure (**Fig. 12.2**).

Fitting the Burner Heads

When fitting the burner heads, ensure they locate properly within the base (**Fig. 12.3**). If you look at the bottom of the burner head you will see two 'pips'; these fit into the two notches in the burner base (**Fig. 12.4**).

If the flame is distorted, check that the burner head is correctly placed over the burner base (**Fig. 12.5**).

Fitting the Grates

Make sure that the grates are in the correct position and sitting on the location pins.

Cooktop check

Refer to "Range Overview" and check operation of each cooking zone in turn. Be sure to use pans of the correct size and material.

Broiler check

Refer to "Range Overview" and check operation of the broiler and that it heats up*.

Oven check

Refer to "Range Overview" and check the operation of both ovens*. Check that the oven fans operate and the ovens heat up.

* The cooling fan, located at the rear right hand side of the cooktop, should operate with this function.

Customer care

Installer: Please complete your details in this guide, inform the user how to operate the range and hand over the instructions.

Fig. 12.1

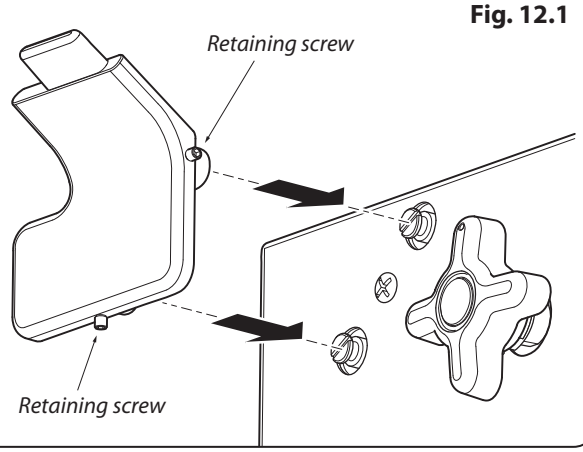

Fig. 12.2

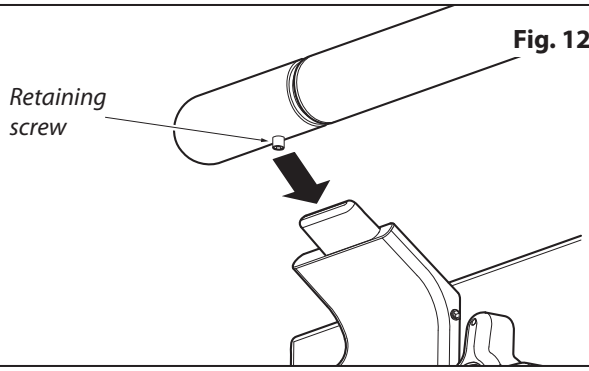

Fig. 12.3

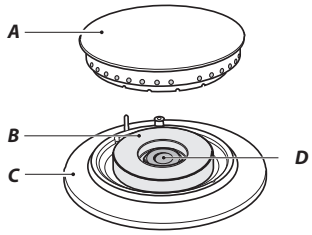

A – Burner head, B - Burner ring, C – Base, D – Venturi

Fig. 12.4

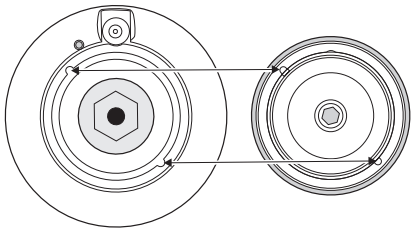

Fig. 12.5

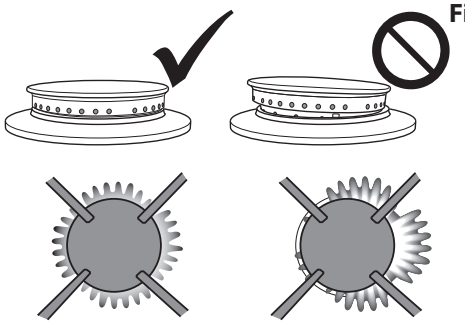

Fitting the drawer

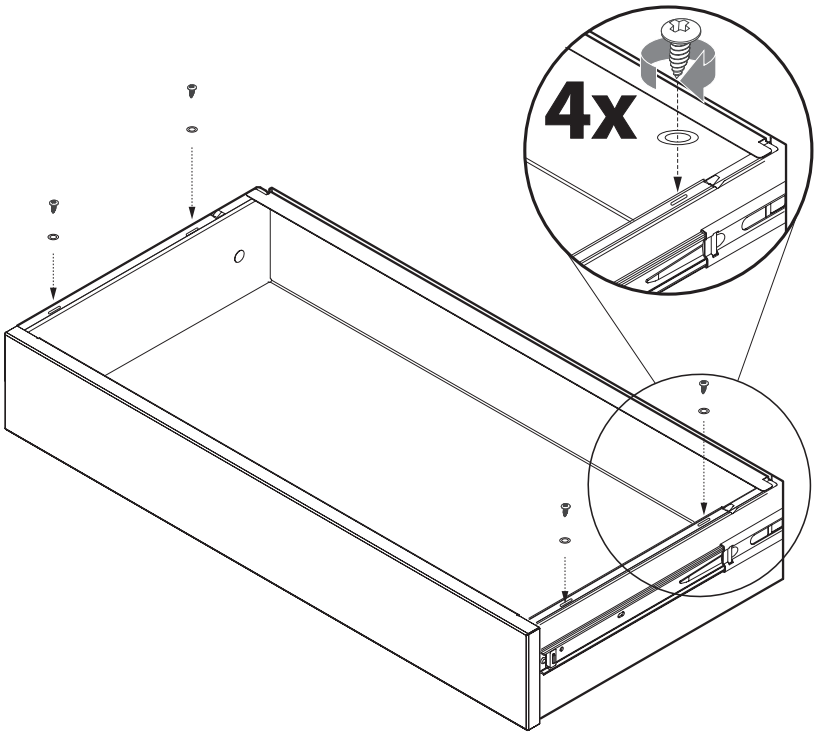

Removing the drawer

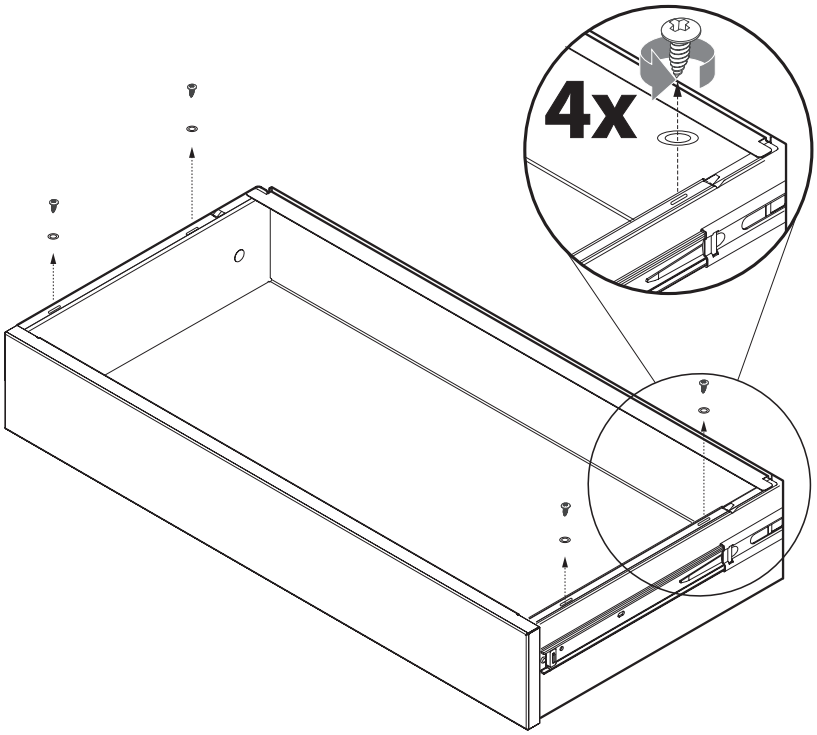

13. Circuit diagram

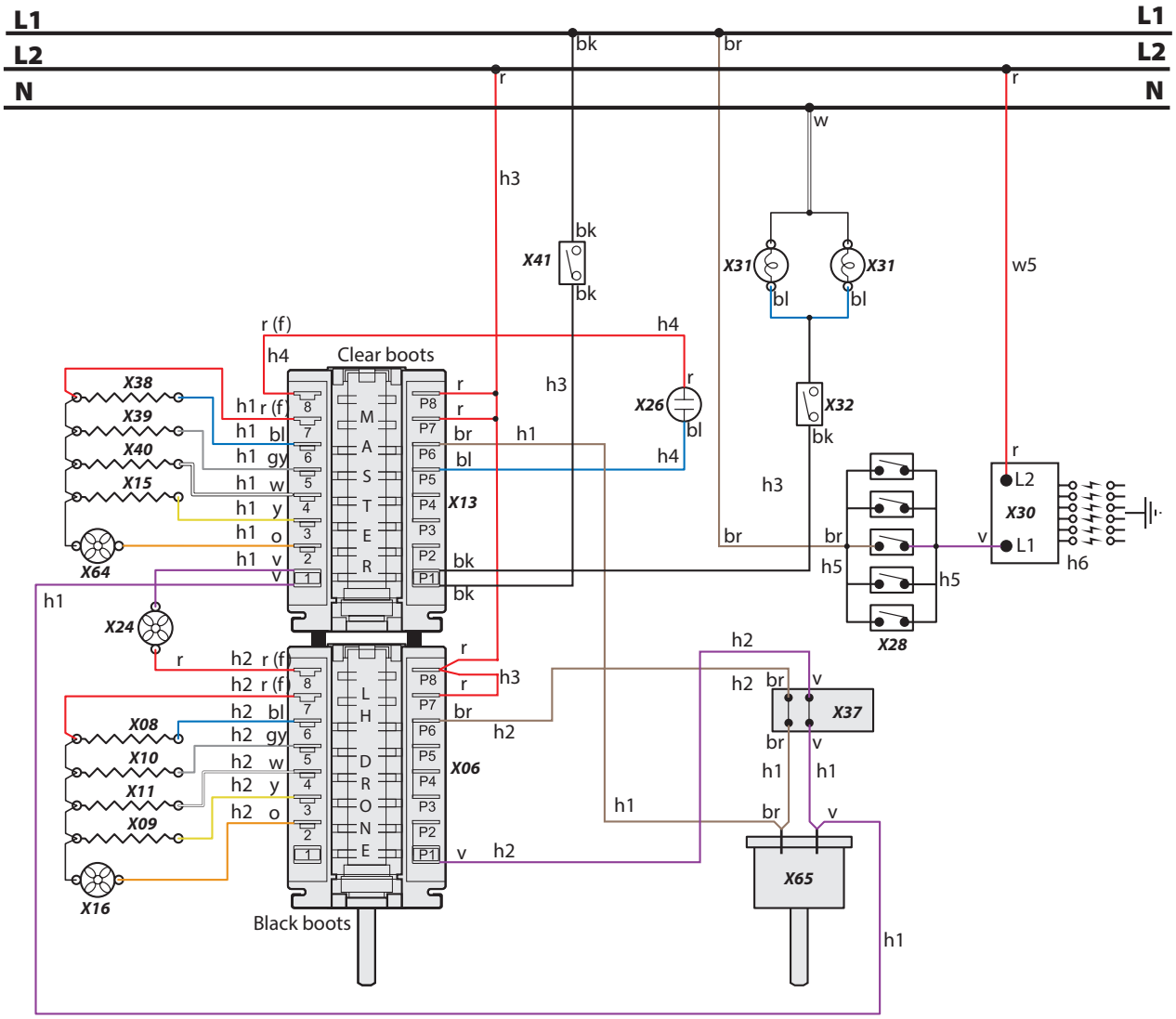

Key

The connections shown in the circuit diagram are for single-phase. The ratings are for 230 V 50 Hz.
Component positions viewed from the front of the range.

Code	Description
X06	Left Hand Oven Multifunction Switch
X08	Left Hand Oven Base Element
X09	Left Hand Oven Fan Element
X10	Left Hand Oven Top Outer Element
X11	Left Hand Oven Top Inner Element
X12	Right Hand Oven Thermostat
X13	Right Hand Oven Multifunction Switch
X15	Right Hand Oven Fan Element
X16	Oven Fan
X24	Cooling Fan
X26	Neon

Code	Description
X28	Ignition Switches
X29	Ignition Switch
X30	Spark Generator
X31	Oven Light
X32	Oven Light Switch
X37	Divider Switch
X38	Right Hand Oven Base Element
X39	Right Hand Oven Top Outer Element
X40	Right Hand Oven Top Inner Element
X41	Thermostat Protection

Code	Color
bl	Blue
br	Brown
bk	Black
or	Orange
r	Red
v	Violet
w	White
y	Yellow
g/y	Green/yellow
gy	Gray

14. Technical data

INSTALLER: Please leave these instructions with the user.

DATA BADGE LOCATION: Inside base drawer of cavity.

COUNTRY OF DESTINATION: USA/Canada

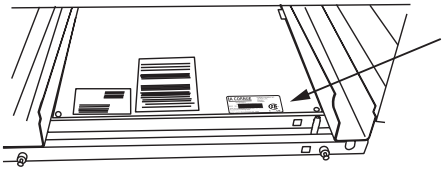

Connections

Electric	240 V 60 Hz
Gas	½" NPT at rear left-hand side

Dimensions

Model	Elise 36 Dual Fuel	
Overall height	minimum 36" (915 mm)	maximum 37" (940 mm)
Overall width	35½" (900 mm)	
Overall depth (inc. handles)	27⅝" (701 mm)	
Minimum height above the hotplate	31½" (800)	

Oven ratings

Fan element (x2)	1.8 kW each
Top element (x2)	0.75 kW each
Browning element (x2)	1.15 kW each
Bottom element (x2)	0.75 kW each

Ratings

Gas Cook Top	Bypass Screw*	Natural gas 4" WC		Propane gas 10" WC	
		Input	Orifice	Input	Orifice
Center burner	49	17,000 btu/hr	205	17,000 btu/hr	118
Large burner	38	12,000 btu/hr	150	12,000 btu/hr	99
Right-hand front burner	31	6,000 btu/hr	112	6,000 btu/hr	68

* The valves in this range are fitted with adjustable bypass screws. The range is supplied with the bypass screws set for Natural gas. For LPG conversion the bypass screws must be screwed all the way down.

Efficiencies

Oven	
Energy efficiency class on a scale of A (more efficient) to G (less efficient)	A
Energy consumption based on standard load	0.99 kWh
Usable volume (cubic feet)	3.8
Size	Large
Time to cook standard load	44 minutes

Maximum total electric load 240 V = 3.65 kW, 16.5 A (including oven fans, lights, etc.)

Note: The maximum input at any time is given as the fanned grill, which is all top elements and the fan.

15. Warranty

CONSUMER WARRANTY

ENTIRE PRODUCT – LIMITED TWO YEAR WARRANTY

Any cosmetic faults must be reported within 7 days of installation.

AGA warrants the replacement or repair of all parts of this range which prove to be defective in material or workmanship, with the exception of the painted or porcelain enamel finish or plated surfaces, for two year from the date of original purchase. Such parts will be repaired or replaced at the option of AGA without charge, subject to the terms and conditions set out below.

The warranty period against defects in the painted or porcelain enamel finish, or plated surfaces, is 90 days from the date of original purchase. **The warranty does not include replacement of oven lamps.**

OVEN ELEMENTS - LIMITED SECOND THROUGH THIRD YEAR WARRANTY

AGA warrants the oven heating elements against defects in material or workmanship for an additional two years. These parts will be repaired or replaced at the discretion of AGA without charge, but you pay for labor and transportation subject to the terms and conditions set out below.

TERMS AND CONDITIONS

1. This warranty applies only for single family domestic use when the range has been properly installed according to the instructions supplied by AGA and is connected to an adequate and proper utility service.

Damage due to faulty installation, improper usage and care, abuse, accident, fire, flood, acts of God, commercial, business or rental use, and alteration, or the removal or defacing of the serial plate, cancels all obligations of this warranty. Service during this warranty must be performed by a factory Authorized Service Person.

2. **Warranty applies to product only in the country in which it was purchased.**
3. AGA is not liable for any claims or damages resulting from any failure of the range or from service delays beyond their reasonable control.
4. To obtain warranty service, the original purchaser **must** present the original Bill of Sale, Model and Serial number. Components repaired or replaced are warranted through the remainder of the original warranty period only.
5. The warranty does not cover expenses involved in making this appliance readily accessible for servicing.
6. This warranty gives you specific legal rights. Additional warranty rights may be provided by law in some areas.
7. Adjustments such as calibrations, leveling, tightening of fasteners, or utility connections normally associated with original installation are the responsibility of the dealer or installer and not that of the Company.

TO ENSURE PROMPT WARRANTY SERVICE, SEND IN YOUR WARRANTY CARD WITHIN 10 DAYS OF PURCHASE.

If further help is needed concerning this warranty, contact:

PLACE OF PURCHASE _____

DATE OF PURCHASE _____

SERIAL NUMBER _____

MODEL NUMBER _____

Middleby Residential
4960 Golden Pkwy
BLDG 3
Buford, GA 30518
Business 770.932.7282
Fax 770.932.7292
Toll Free Telephone 800.241.9152

Middleby Residential
4960 Golden Pkwy
BLDG 3
Buford, GA 30518
Business 770.932.7282
Fax 770.932.7292
Toll Free Telephone 800.241.9152

https://www.agarangeusa.com/