MERCURY

48" Dual Fuel Range

Owner's Guide

User & Installation Instructions

READ THESE INSTRUCTIONS FULLY BEFORE USE
SAVE THESE INSTRUCTIONS FOR FUTURE REFERENCE

AGA

U110649 - 08

WARNING! If the information in these instructions is not followed exactly, a fire or explosion may result, causing property damage, personal injury or death.

- **DO NOT store or use gasoline or other flammable vapors and liquids in the vicinity of this or any other appliance.**
- **WHAT TO DO IF YOU SMELL GAS**
  - **DO NOT TRY TO LIGHT ANY APPLIANCE.**
  - **DO NOT TOUCH ANY ELECTRICAL SWITCH.**
  - **DO NOT USE ANY PHONE IN YOUR BUILDING.**
  - **FOLLOW THE GAS SUPPLIER'S INSTRUCTIONS.**
- **If you cannot reach your gas supplier, call the fire department.**
- **Installation and service must be performed by a qualified installer, service agency or the gas supplier.**

WARNING!

The anti-tip device supplied with this range must be installed when the appliance is installed. This will reduce the risk of tipping of the appliance from abnormal usage or by excessive loading of the oven door.

⚠WARNING!

- **DO NOT OPERATE THE RANGE WITHOUT THE ANTI-TIP DEVICE IN PLACE AND ENGAGED.**
- **INSTALL ANTI-TIP BRACKET PACKED WITH RANGE - SEE INSTALLATION INSTRUCTIONS.**
- **A CHILD OR ADULT CAN TIP THE RANGE AND BE KILLED.**
- **ENGAGE THE RANGE TO THE ANTI-TIP DEVICE - SEE INSTALLATION INSTRUCTIONS.**
- **RE-ENGAGE THE ANTI-TIP DEVICE IF THE RANGE IS MOVED.**
- **FAILURE TO DO SO CAN RESULT IN DEATH OR SERIOUS BURNS TO CHILDREN OR ADULTS.**

The following symbols are related to safety and are used on the product and throughout this manual.

Meaning / Description	Symbol
WARNING / CAUTION An appropriate safety instruction should be followed or caution taken if a potential hazard exists.	
DANGEROUS VOLTAGE To indicate hazards arising from dangerous voltages.	
PROTECTIVE EARTH (GROUND) To identify any terminal which is intended for connection to an external conductor for protection against electric shock in case of a fault, or the terminal of a protective earth (ground) electrode.	

Meaning / Description	Symbol
HEAVY This product is heavy and reference should be made to the safety instructions for provisions of lifting and moving.	
DISCONNECT MAINS SUPPLY Disconnect incoming supply before inspection or maintenance.	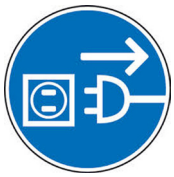

Contents

1. Important safety information 1

2. Range overview 5

Cooktop 5
Wok burner 6
Wok cradle 6
Igniting cooktop burners without electricity 7
Glide out broiler system™ 7
Ovens 8
7-mode multi-function oven settings 8
Convection oven 9
Operating the ovens 10

3. Using the Glide-out Broiler™ 12

4. Cooking tips 13

5. Cooking table 14

6. Cleaning your range 15

7. Troubleshooting 19

8. Installation Instructions 21

9. Service and parts 23

10. Installation safety instructions 24

11. Installation 26

12. Fitting the flue, flue vent a nd side panels 29

Fitting the knobs 29
Fitting the flue 29
Fitting the flue vent 29
Fitting the cooling fan box 30
Setting the height 30
Fitting the side panel rear retaining brackets 31
Fitting the obscuring trims 32
Fitting the side panels 32
Fitting the front mounting brackets 33
Fitting the bottom panel *(toe kick)* 34
Fitting the drawer 35
Fitting the restraint chain and anti-tip device 36
Completing the move 36

13. Removing the side panels 37

Removing the storage drawer 37
Removing the bottom panel *(toe kick)* 37
Removing the side panels 38

14. Gas connection 39

15. Electrical connection 41

16. Final fitting and checks 46

17. Circuit diagram 47

18. Technical data 48

19. Warranty 49

1. Important safety information

Read all instructions before using this appliance. Save these instructions for future reference.

Have your appliance properly installed and grounded by a qualified technician. The installation must conform with local codes, or in the absence of local codes, in accordance with the National Fuel Gas Code, ANSI Z223. 1/NFPA 54 or, in Canada, the Natural Gas and Propane Installation Code, CSA B149. 1 and in addition the National Electrical Code NFPA 70 or the Canadian Electric Code, CSA C22. 1.

Install only as described in the installation section of this book.

Ask your dealer to recommend a qualified technician and an authorized repair service. Know how to disconnect the power to the range at the circuit breaker or fuse box in case of an emergency.

The anti-tip device supplied with this range must be installed when the appliance is installed. This will reduce the risk of tipping of the appliance from abnormal usage or by excessive loading of the oven door or storage drawer.

Leaning, sitting or stepping on the doors or drawer of this range can result in serious injuries and also cause damage to the range. **DO NOT** allow anyone to climb, stand or hang on any part of the range.

Important safety notice and warning

Prior to connection, the power cord should be inspected for any damage. In the event of damage please consult your electrical installer.

You must provide adequate clearances between the range and adjacent combustible surfaces. Refer to Installation Instructions.

Save the installation instructions for the local electrical inspector's use.

In case of fire

DO NOT use water on grease fires. NEVER pick up a flaming pan. Turn the controls off. Smother a flaming pan on a cooktop burner by covering the pan completely with a well fitting lid or baking tray. Isolate the power source, where it is safe to do so. If available, use a multipurpose dry chemical or foam-type fire extinguisher.

If the fire is in an oven pan, smother by closing the oven door. Open doors and windows, or if a hood is installed, turn it on to remove smoke and odor.

To prevent fire or smoke damage

Before using the range, make sure all the packing materials have been removed.

Always keep the area around the range free from combustible materials, gasoline, and other flammable vapors and liquids.

If the range is installed near a window, proper precautions should be taken to prevent curtains from blowing over the burners.

NEVER leave any items on the range cooktop. The hot air from an oven vent may ignite flammable items and may increase pressure in closed containers, which may cause them to burst. Many aerosol-type spray cans are EXPLOSIVE when exposed to heat and may be highly flammable. Avoid using or storing them near an appliance.

Many plastics will burn and most are damaged by heat. Keep plastic items away from parts of the range that may become warm or hot. **DO NOT** leave plastic items on the cooktop as they may burn, melt or soften if left too close to a vent or a lighted burner.

Storage should not be installed directly above a range. If anything is stored above the range, it should be limited to infrequently used items, which can be safely stored in an area subjected to heat from a range. Temperatures may be unsafe for some items such as volatile liquids, cleaners or aerosol sprays.

Destroy the carton and plastic bags after unpacking the range. **NEVER** allow children to play with packaging material.

NEVER use this appliance as a space heater to heat or warm the room. Doing so may result in carbon monoxide poisoning and overheating of the oven.

NEVER cover any slots, holes or passages in the oven bottom or cover an entire rack with materials such as aluminum foil. Doing so blocks airflow through the oven and may cause carbon monoxide poisoning. Aluminum foil linings may also trap heat, causing a fire hazard.

It is recommended that this appliance is serviced annually by a qualified service engineer.

DO NOT repair or replace any part of the appliance unless specifically recommended in this User Manual. Always consult a qualified service engineer.

All other servicing should be done only by a qualified technician, this may reduce the risk of personal injury and damage to the range.

NEVER modify or alter the construction of a range by removing leveling legs, panels, wire covers, anti-tip brackets/ screws, or any other part of the product.

DO NOT leave children alone.

Babies, toddlers and young children should not be allowed near the range at any time. They should **NEVER** be allowed to sit or stand on any part of the appliance.

DO NOT allow children to climb or play around the range. The weight of a child on an open door may cause the range to tip, resulting in serious burns or other injury.

Teach them not to play with controls or any other part of the range.

NEVER store items of interest to children in the cabinets above a range or on the backguard of a range; children climbing on the range to reach them could be seriously injured.

DO NOT use the oven for storage.

This instruction is based on safety considerations.

Flammable materials should not be stored in an oven, the range storage drawer or near the cooktop burners. This includes paper, plastic and cloth items, such as cookbooks, plastic ware and towels, as well as flammable liquids. **DO NOT** store explosives, such as aerosol cans, on or near the appliance.

Flammable materials may explode and result in fire or property damage.

To avoid the risk of electrical shock, personal injury, or death, make sure your range has been properly grounded and always disconnect it from the main power supply before servicing.

DO NOT touch cooktop burners or areas near burners.

Gas burners may be hot even if they have been off for some time. Areas near the gas burners may become hot enough to cause burns. During and after use, **DO NOT** touch, or let clothing touch or other flammable materials contact the burners or areas near the burners until they have had enough time to cool. These areas include the cooktop and rear vent.

DO NOT touch heating elements or interior surfaces of ovens.

Oven heating elements may be hot though they are dark in color. Interior surfaces of an oven may become hot enough to cause burns. During and after use, **DO NOT** touch, or let clothing or other flammable materials touch heating elements or interior surfaces of oven until they have had enough time to cool.

Other range surfaces that may become hot enough to cause burns are the broiler compartment and oven vent at the rear of the range.

Wear suitable clothing

NEVER wear loose-fitting or hanging clothes while using the range. Be careful when reaching for items stored in cabinets over the cooktop. Flammable material could be ignited if brought into contact with a burner flame or hot surface and may cause severe burns.

Use only dry potholders or oven gloves

Moist or damp potholders on hot surfaces may result in burns from steam. **NEVER** let a potholder touch hot heating elements.

DO NOT use a towel or other bulky cloth in place of a glove. They might catch fire if they touch a hot surface.

Use dry oven gloves when applicable – using damp gloves might result in steam burns when you touch a hot surface. **NEVER** operate the range with wet hands.

Important safety notice and warning

The California Safe Drinking Water and Toxic Enforcement Act of 1986 (Proposition 65) requires the Governor of California to publish a list of substances known to the State of California to cause cancer or reproductive harm, and requires businesses to warn customers of potential exposures to such substances.

This appliance contains or produces a chemical or chemicals which can cause death or serious illness and which are known to the state of California to cause cancer, birth defects or other reproductive harm.

Users of this appliance are hereby warned that the burning of gas can result in low-level exposure to some of the listed substances, including benzene, formaldehyde and soot, due primarily to the incomplete combustion of natural gas or liquid petroleum (LP) fuels. Properly adjusted burners will minimize incomplete combustion.

Exposure to these substances can also be minimized by properly venting with an open window or using a ventilation fan or hood.

To reduce the risk from substances in the fuel or from fuel combustion, make sure this appliance is installed, operated, and maintained according to the instructions in this booklet.

Conversion

This appliance is supplied set for Natural gas. A conversion kit for Propane gas is supplied with the range.

Be sure your range is correctly adjusted by a qualified service technician or installer for the type of gas (Natural or LP) that is to be used. See the Installation section of these instructions.

WARNING!
These adjustments must be made by a qualified service technician in accordance with the manufacturer's instructions and all codes and requirements of the authority having jurisdiction. Failure to follow these instructions could result in serious injury or property damage. The qualified agency performing this work assumes responsibility for the conversion.

User servicing

DO NOT repair or replace any part of the appliance unless specifically recommended in the manual. All other servicing should be referred to a qualified technician.

Cooktop burners

Quality of flames

On Natural Gas, the burners' flames should be a blueish color with, at most, a slightly yellowish fringe.

On Propane gas, the flames may be "softer". The cooktop burner flames may have a slightly yellowish tip.

If the flame burns with a long white tip, you should call for service.

If the flame is distorted, check that the burner head is correctly placed over the burner.

MAKE SURE THE FLOW OF COMBUSTION AND VENTILATION AIR TO THE RANGE IS UNOBSTRUCTED.

Use the right size pan

This appliance is equipped with burners of different sizes. Use utensils with flat bottoms. **DO NOT** use unstable pans and position the handles away from the edge of the cooktop. Make sure the flames are under the pans. It is unsafe to let the flames burn up the sides of the pan; the handle may get too hot.

A proper relationship between the utensil and burner will also improve efficiency.

NEVER leave cooktop burners unattended at high settings. Pans boiling over can cause smoking and greasy spills may catch on fire.

Protective Liners – DO NOT use aluminum foil to line cooktop bowls or oven bottoms. Foil liners may result in a risk of electric shock or fire and will damage the enamel finish. NEVER allow aluminum foil to contact the heating elements.

DO NOT use hotplate protectors, foil or hotplate covers of any description. These may affect the safe use of your hotplate burners and are potentially hazardous to health.

Glazed Cooking Utensils – Only certain types of glass, glass/ceramic, ceramic, earthenware, or other glazed utensils are suitable for range top use without breaking due to the sudden change in temperature.

Utensil handles should be turned inward and not positioned over adjacent burners. If handles are left over adjacent burners they will get hot and may burn.

Use of aluminum pans may cause metallic marking of the grates. This does not affect the durability of the enamel and may be cleaned off with a metal polish.

Ovens

Use care when opening the door.

Let hot air and steam escape before removing or replacing food.

NEVER heat unopened food containers. Pressure buildup may make the container burst and cause injury.

Keep oven vent ducts unobstructed.

Placement of oven racks

Always place oven racks in the desired location while the oven is cool. If the rack must be moved while the oven is hot, DO NOT let the potholder contact the hot heating element in the oven.

WARNING!THIS APPLIANCE IS PROVIDED WITH ROLLERS TO FACILITATE MOVEMENT DURING INSTALLATION. THE RANGE SHOULD NOT BE MOVED AFTER INSTALLATION.

General safety instructions

This appliance must be installed by a competent person in accordance with the installation instructions. The installation must comply with the relevant regulations and also the local electricity supply company requirements.

This appliance is designed for domestic cooking only. Use for any other purpose could invalidate any warranty or liability claim.

The use of a gas cooking appliance results in the production of heat and moisture in the room in which it is installed. Make sure that the kitchen is well ventilated: keep natural ventilation holes open or install a mechanical ventilation device, (mechanical extractor hood).

Prolonged intensive use of the appliance may call for additional ventilation, for example opening a window, or more effective ventilation, for example increasing the level of mechanical ventilation where present.

This appliance should not be installed with any ventilation system that blows air downward toward the gas cooking appliance. This type of ventilation system may cause ignition and combustion problems with the gas cooking appliance, resulting in personal injury or unintended operation. Ventilating systems that direct the air upwards can be used.

The range should be serviced by a qualified service engineer and only approved parts used. Have the installer show you the location of the range circuit breaker. Mark it for easy reference. Always allow the range to cool and then switch it off at the circuit breaker before cleaning or carrying out any maintenance work, unless specified otherwise in this guide.

All parts of the range become hot with use and will retain heat even after you have stopped cooking.

Take care when touching the range in order to minimize the possibility of burns; always be certain that the controls are in the OFF position and that it is cool before attempting to clean the range.

Clean with caution. If a wet sponge or cloth is used to wipe spills on a hot surface, be careful to avoid steam burns. Some cleaners can produce noxious fumes if applied to a hot surface.

Clean only parts listed in this guide.

In the interests of hygiene and safety, the range should be kept clean at all times as a build up of fats and other food stuff could result in a fire.

Always keep combustible wall coverings or curtains etc. a safe distance away from your range.

DO NOT spray aerosols in the vicinity of the range while it is in use.

DO NOT store or use combustible materials, or flammable liquids in the vicinity of this appliance.

Take great care when heating fats and oils, as they will ignite if they get too hot.

Use a deep fat thermometer whenever possible to prevent overheating fat beyond the smoking point.

NEVER leave a deep fry pan unattended. Always heat fat slowly, and watch as it heats. Deep fry pans should be only a maximum of one third full of fat. Filling the pan too full of fat can cause overspill when food is added. If you use a combination of oils or fats in frying, stir them together before heating, or as the fats melt.

Foods for frying should be as dry as possible. Frost on frozen foods or moisture on fresh foods can cause hot fat to bubble up and over the sides of the pan. Carefully watch for spills or overheating of foods when frying at high or medium high temperatures. **NEVER** try to move a pan of hot fat, especially a deep fry pan. Wait until the fat is cool.

When an oven is on, **DO NOT** use the top of the flue (the round holes along the back of the range) for warming plates, dishes, drying dish towels or softening butter.

When using an electrical appliance near the cooktop, be sure that the cord of the appliance does not come into contact with the cooktop.

Take care that no water seeps into the appliance.

Make sure that your kitchen is well ventilated at all times. Use extractor fans or hoods when installed.

The range is designed for cooking foods only and must not be used for any other purpose.

The oven should **NOT** be used for heating the kitchen, not only does this waste fuel but the control knobs may become overheated.

When the oven is on **DO NOT** leave the oven door open for longer than necessary.

The specification of this range should not be altered.

This appliance is heavy, take care when moving it.

When the range is not in use, ensure that the control knobs are in the OFF position.

2. Range overview

Fig. 2.1

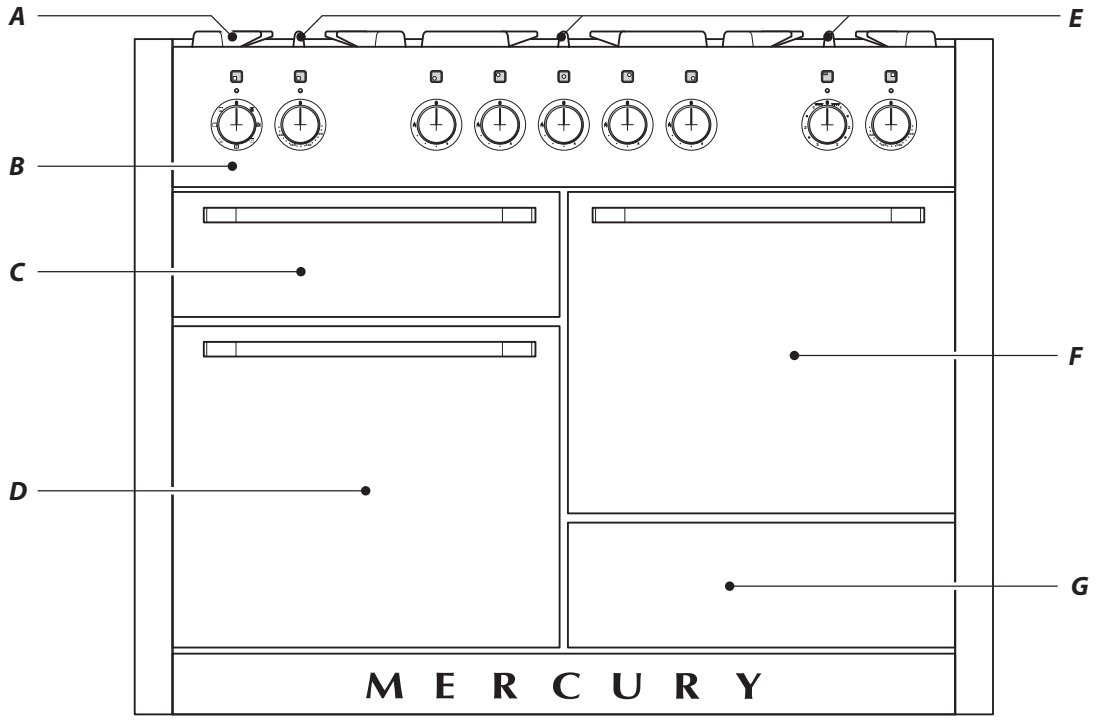

The 48" dual fuel range (**Fig. 2.1**) has the following features:

A. 5 gas burners including 1 wok burner (**Fig. 2.2**)

B. A control panel

C. Glide Out Broiler System™

D. Main multi-function oven

E. Interlocking cast iron grates

F. Convection oven

G. Storage drawer

Fig. 2.2

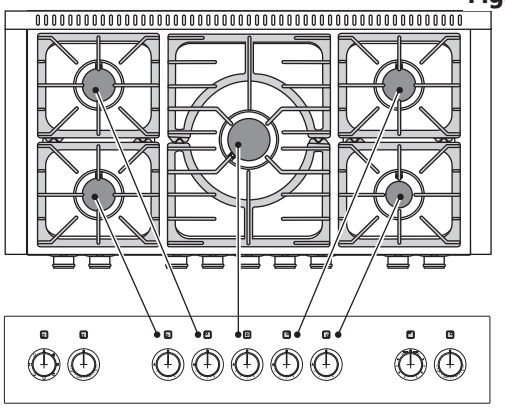

Cooktop

The icon by each of the central knobs indicates which burner that knob controls.

Each burner has a Flame Supervision Device (FSD) that prevents the flow of gas if the flame goes out.

When a knob is pressed in, sparks will be made at each burner ignitor – this is normal. **DO NOT** attempt to disassemble or clean around any burner while another burner is on, otherwise an electric shock could result.

To light a burner, push in the selected burner control knob and turn it to the high position, as indicated by the large flame symbol **(Fig. 2.3)**. The igniter should spark and light the gas. Keep the knob pressed in for 4 seconds until the burner remains lit.

Fig. 2.3

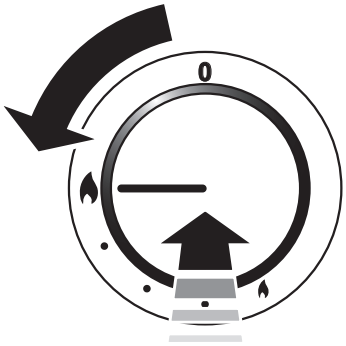

Fig. 2.4

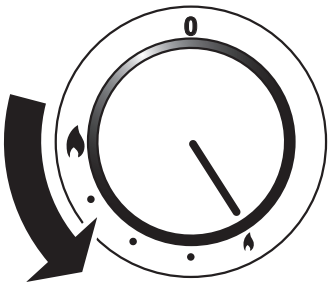

Fig. 2.5

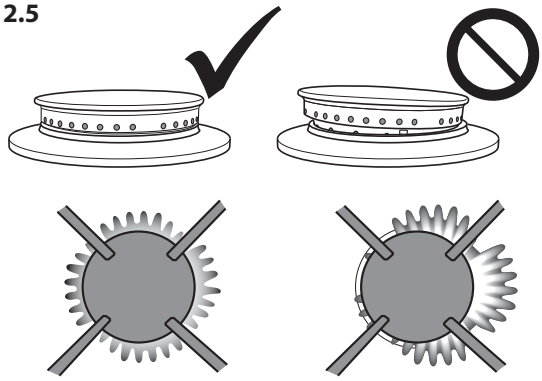

Fig. 2.6

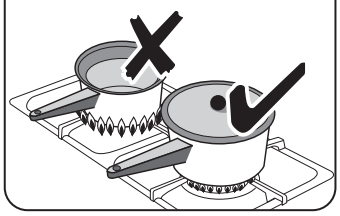

Fig. 2.7

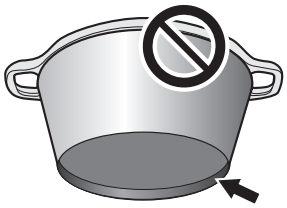

Fig. 2.8

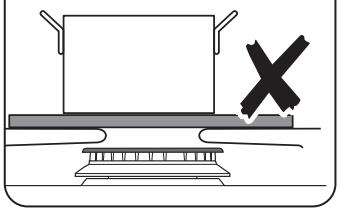

Fig. 2.9

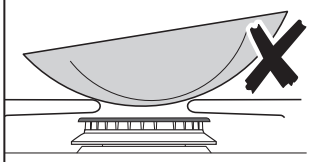

Fig. 2.10

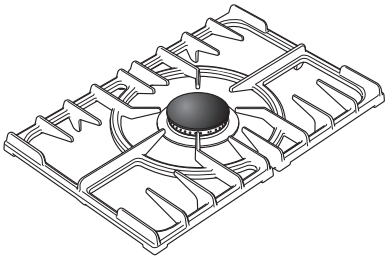

Fig. 2.11

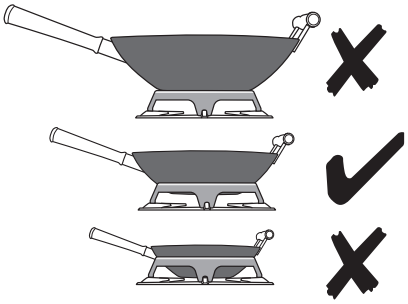

When you release the control knob, if the burner goes out, the Flame Supervision Device (FSD) has not been bypassed. Turn the control knob to the **OFF** position and wait for one minute before you try again, this time making sure to hold in the control knob for slightly longer.

Adjust the flame height to suit by turning the knob counter-clockwise (**Fig. 2.4**). On this range the low position is beyond high, not between high and off.

If a burner flame goes out, turn off the control knob and leave it for one minute before relighting it.

If the flame is distorted, check that the burner head is correctly placed over the burner base (**Fig. 2.5**)

If the flame burns with a long white tip you should call for service.

Make sure that the flames are under the pans. Using a lid will help the contents boil more quickly (**Fig. 2.6**).

Large pans should be spaced well apart.

Pans and kettles with concave bases or down-turned base rims should not be used (**Fig. 2.7**).

Simmering aids, such as asbestos or mesh mats, are **NOT** recommended **(Fig. 2.8)**. They will reduce burner performance and could damage the burner grates.

You should also avoid using unstable and misshapen pans that may tilt easily, and pans with a very small base diameter, e.g. single egg poachers **(Fig. 2.9)**.

The minimum recommended pan diameter is 6 ⅝" (160 mm). The maximum allowable pan base diameter is 10 ¼" (260 mm). Minimum size wok pan at top is diameter 13 3⁄16" (335 mm).

DO NOT use cookware on the burners that overlap the edges.

Wok burner

The wok burner is designed to provide even heat over a large area. Ideal for large pans and stir dishes (**Fig. 2.10**).

For heating smaller pans, the aforementioned burners may be more efficient.

You should wipe the enamel top surface of the range around the hotplate burners as soon as possible after spills occur. Try to wipe them off while the enamel is still warm.

NOTE: The use of aluminum pans may cause metallic marking on the burner grates. This does not affect the durability of the enamelled cast iron and may be cleaned off with an appropriate metal cleaner.

Wok cradle

The wok cradle is designed to fit a 13 ¾" (350 mm) wok. If you use a different wok, make sure that it fits the cradle. Woks vary very widely in size and shape. It is important that the wok sits down on the burner grates – however, if the wok is too small, the cradle will not support it properly (**Fig. 2.11**).

We recommend a minimum wok pan of 13 3⁄16" (335 mm). The cradle should be used on the wok burner only. When you fit the cradle, make sure that it is supported properly on a burner grate and the wok is sitting level in the cradle (**Fig. 2.12**).

The cradle will get very hot in use – allow plenty of time for it to cool before you pick it up.

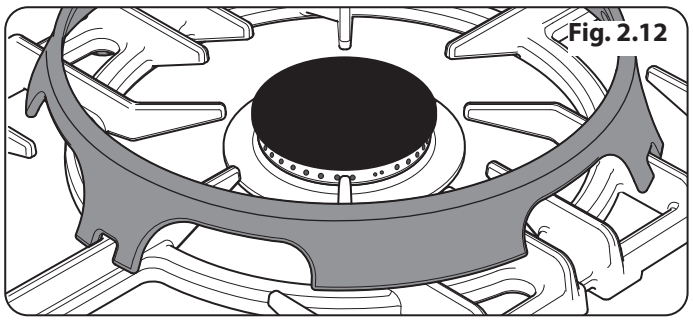
Fig. 2.12

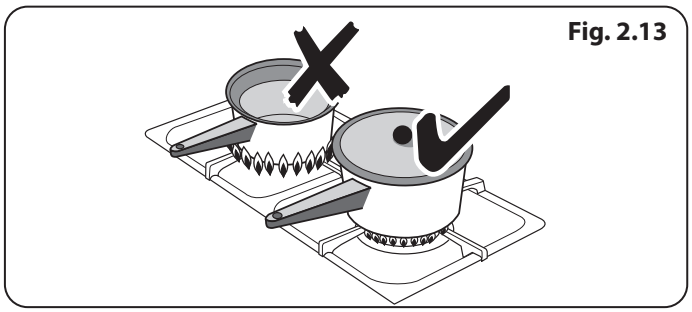
Fig. 2.13

Igniting cooktop burners without electricity

If there is a power failure, the cooktop burners can be lit with a match.

1. Hold a burning a match ½ inch from the burner head keeping your hand as far horizontally away from the burner as possible.
2. Push and turn burner control knob to the high position, as indicated by the large flame symbol. As soon as the burner flame lights move your hand away. With your other hand, keep holding the knob pressed for a few seconds so that the burner safety device can 'sense' the heat of the flame.
3. Make sure that the flames are under the pans **(Fig. 2.13)**. Using a lid will help the contents boil more quickly.
4. Turn burner control knob to OFF position when finished.

Glide out broiler system™

⚠ **When the trivet has been removed from the broiler pan, please ensure that the broiler pan and cradle are fully returned into the broiler chamber. The broiler door MUST remain open.**

1. For best results, slide the carriage back into the broiler chamber. The broiler trivet can be removed and the food placed on it while you are waiting for the broiler to preheat.
2. **DO NOT** leave the broiler oven door open for more than a few moments without the broiler pan underneath it , otherwise the knobs may become hot.
3. Preheat the broiler chamber prior to placing the food on the trivet. Once the trivet is placed back into the broiler pan, place the broiler pan back into the broiler carriage. Slide the carriage back into the broiler chamber.

⚠ **Accessible parts may be hot when the broiler is in use. Young children should be kept away.**

Ovens

Please refer to **(Fig. 2.1)**.

References to 'left-hand' and 'right-hand' ovens apply as viewed from the front of the appliance.

The left-hand oven is a multi-function oven, while the right-hand oven is a convection oven.

Multi-function Oven

As well as the oven fan and fan element, they are fitted with two extra heating elements, one visible in the top of the oven and the second under the oven base. Take care to avoid touching the top element and element deflector when placing or removing items from the ovens.

The multi-function oven has 3 main cooking functions: convection, fan assisted and conventional cooking. These functions should be used to complete most of your cooking.

The browning element and base heat can be used in the latter part of the cooking process to fine tune the results to your particular requirements.

Use convection broiling for all your broiling needs and defrost to safely thaw small items of frozen food.

Table 2.1 gives a summary of the multi-function modes.

The multi-function ovens have many varied uses. We suggest you keep a careful eye on your cooking until you are familiar with each function. Remember – not all functions will be suitable for all food types.

Please remember that all ranges vary – temperatures in your new ovens may differ to those in your previous range.

7-mode multi-function oven settings

Defrost

This function operates the fan to circulate cold air only. Make sure the temperature control is **OFF** and that no heat is applied. This enables small items such as desserts, cream cakes and pieces of meat, fish and poultry to be defrosted.

Defrosting in this way speeds up the process and protects the food. Pieces of meat, fish and poultry should be placed on a rack, over a tray to catch any drips. Be sure to wash the rack and tray after defrosting.

Defrost with the oven door closed.

Large items, such as whole chickens and joints should not be defrosted in this way. We recommend this be carried out in a refrigerator.

Defrosting should not be carried out in a warm oven or when an adjoining oven is in use or still warm.

Make sure that dairy foods, meat and poultry are completely defrosted before cooking.

Convection

This function operates the fan and the heating element around it. An even heat is produced throughout the oven, allowing you to cook large amounts quickly.

Convection cooking is particularly suitable for batch baking on several shelves at one time and is a good 'all-round' function. It may be necessary to reduce the temperature by approximately 25 °F/10°C for recipes previously cooked in a conventional oven.

Convection broiling

This function operates the fan whilst the top element is on. It produces a more even, less fierce heat than convection broiling. For best results, place the food to be broiled, on a grid over a roasting tin, which should be smaller than a convection broiling pan. This allows greater air circulation. Thick pieces of meat or fish are ideal for convection broiling, as the circulated air reduces the fierceness of the heat from the broiler chamber.

The oven door should be kept closed while convection broiling is in progress, saving energy.

You will also find that the food needs to be watched and turned less. Preheat this function before cooking.

For best results we recommend that the broiling pan is not located on the uppermost shelf.

Fan assisted

This function operates the fan, circulating air heated by the elements at the top and the base of the oven.

The combination of fan and conventional cooking (top and base heat) makes this function ideal for cooking large items that need thorough cooking, such as a large meat roast.

It is also possible to bake on two shelves at one time, although they will need to be swapped over during the cooking time, as the heat at the top of the oven is greater than at the base, when using this function.

This is a fast intensive form of cooking; keep an eye on the food cooking until you have become accustomed to this function.

Conventional *(Top and Base Heat)*

This function combines the heat from the top and base elements. It is particularly suitable for roasting and baking pastry, cakes and biscuits.

Food cooked on the top shelf will brown and crisp faster than on the lower shelf, because the heat is greater at the top of the oven than at the base, as in 'Fan Assisted' function. Similar items being cooked will need to be swapped around for even cooking. This means that foods requiring different temperatures can be cooked together, using the cooler zone in the lower half of the oven and hotter area to the top.

The exposed top element may cook some foods too quickly, so we recommend that the food be positioned in the lower half of the oven to cook. The oven temperature may also need to be lowered.

Browning

This function uses the element in the top of the oven only. It is a useful function for the browning or finishing of pasta dishes, vegetables in sauce,

and lasagna For best results, the item to be browned should be hot before switching to the top element.

Base heat

This function uses the base element only. It will crisp up your pizza or quiche base or finish off cooking the base of a pastry case on a lower shelf. It is also a gentle heat, good for slow cooking of casseroles in the middle of the oven or for plate warming.

The Browning and Base Heat functions are useful additions to your oven, giving you flexibility to finish off items to perfection.

Convection oven

The right-hand oven is a convection oven that circulates hot air continuously, which means faster, more even cooking.

The recommended cooking temperatures for a convection oven are generally lower than a conventional oven. It may be necessary to reduce the temperature by approximately 25 °F/10°C for recipes previously cooked in a conventional oven.

NOTE: Please remember that all ranges vary so temperatures in your new ovens may differ to those in your previous range.

Function	Use
Defrost	To thaw small items in the oven without heat.
Convection	A full cooking function, even heat throughout, great for baking.
Convection broiling	Broil meat and fish with door closed.
Fan assisted	A full cooking function good for roasting and baking.
Conventional	A full cooking function for roasting and baking in the lower half of the oven.
Browning	To brown and crisp cheese topped dishes.
Base heat	To crisp up the bases of quiche, pizza or pastry.

Table 2.1

Fig. 2.14

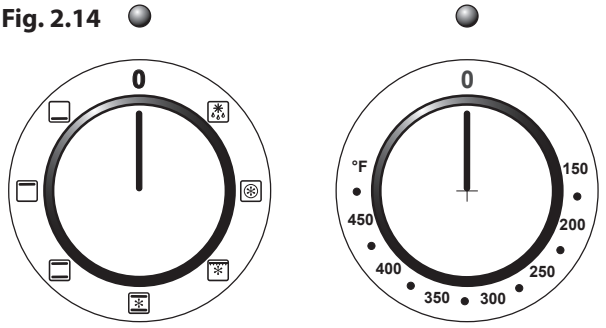

Function control *Temperature control*

Fig. 2.15

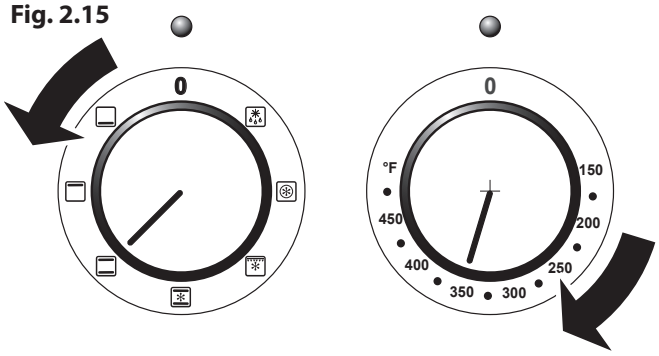

Fig. 2.16

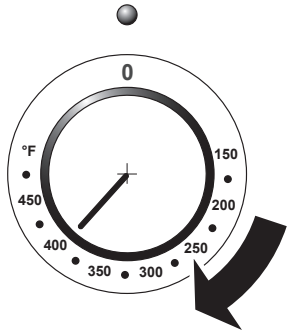

Fig. 2.17

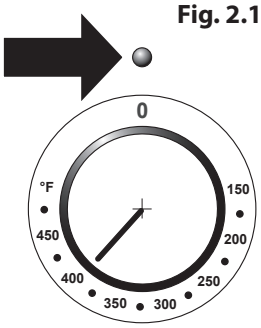

Fig. 2.18

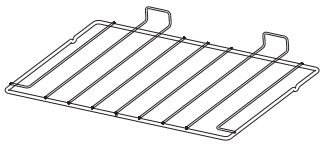

Fig. 2.19

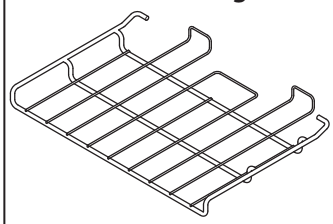

Fig. 2.20

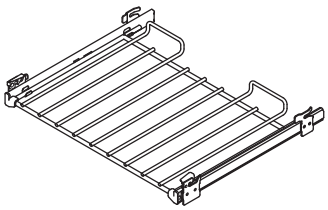

Fig. 2.21

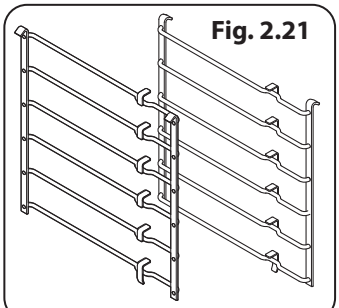

Operating the ovens

Operating the multi-function oven

1. The multi-function oven has two controls: a function selector and a temperature setting knob **(Fig. 2.14)**.
2. Turn the function selector control to a cooking function. **Fig. 2.15** shows the control set for convectional oven cooking.
3. Turn the oven temperature knob to the temperature required **(Fig. 2.15)**.

The oven heating light will glow until the oven has reached the temperature you selected. It will then cycle on and off during cooking as the oven maintains the selected temperature.

Operating the convection oven

1. Turn the oven knob to the desired temperature **(Fig. 2.16)**.
2. The oven indicator light will glow until the oven has reached the temperature selected. It will then cycle on and off during cooking **(Fig. 2.17)**.

Accessories

Oven shelves

The range is supplied with the following:

- 2 standard shelves (**Fig. 2.18**)
- 1 drop shelf (**Fig. 2.19**)
- 2 telescopic shelves with runners (**Fig. 2.20**)
- 2 sets of side supports (**Fig. 2.21**)

The oven shelves are retained when pulled forward but can be easily removed and refitted.

Storage

The bottom drawer is for storing cooking utensils.

To open, simply push the drawer in and release.

Flammable materials should not be stored in an oven, the range storage drawer or near the cooktop burners. This includes paper, plastic and cloth items, such as cookbooks, plasticware and towels, as well as flammable liquids. **DO NOT** store explosives, such as aerosol cans, on or near the appliance.

⚠ **Flammable materials may explode and result in fire or property damage.**

It can get very warm, **DO NOT** store anything in it that may melt or catch fire.

⚠ **NEVER store flammable materials in the drawer. This includes paper, plastic and cloth items, such as cookbooks, plastic ware and towels, as well as flammable liquids.**

DO NOT store explosives, such as aerosol cans, on or near the appliance.

Flammable materials may explode and result in fire or property damage.

To fit the telescopic shelf runners

With the runner arm in the closed position locate the opening of the upper rear slot onto the side support (**Fig. 2.22**). **DO NOT** locate any further than the opening at this point.

1. Lift the front of the runner arm to locate the front slot against the side support **(Fig. 2.22)**.
2. Push the runner arm towards the rear of the oven. The catch at the front will lift and drop to secure the runner arm in place **(Fig. 2.22)**.

To fit a shelf to the telescopic shelf runners

Slide the telescopic runners forward until they stop. Holding the shelf above the runners, tilt the front downward and locate into the front of the runners. Lay the shelf flat. Press on the rear of the shelf to secure in place.

To remove a shelf from the telescopic shelf runners

1. Slide the shelf out on the runners. While holding one of the runners securely, carefully lift the rear of the shelf upwards: the shelf will spring clear of the central restraining tab. Repeat for the opposite side of the shelf.
2. **NOTE:** To aid the removal of the shelf you can insert a suitable flat tool through the opening in the side of the runners and lever the shelf clear (**Fig. 2.23**).
3. Tilt the front of the shelf downwards and then lift clear of the runners **(Fig. 2.24)**.

To remove the telescopic shelf runners

1. Firstly, remove the shelf as in the 'To Remove a Shelf from the Telescopic Shelf Runners' section **page 11**.
2. Place a finger on the underside of the telescopic runner and lift.
3. Open the catch on top of the runner and pull the runner forward and down to remove.

To remove and fit a shelf to the side supports

1. The shelf has a small kink on either side **(Fig. 2.25)**. To remove the shelf, line these up with the stops in the shelf support **(Fig. 2.26)**. Lift the front of the shelf upward so that it will pass over the shelf stop and then pull it forward **(Fig. 2.27)**.
2. Fit in the reverse order, making sure to push it fully back.

To remove and refit the ladder shelf supports

1. Lift the ladder support hooks out of the two locating holes in the oven side (or divider) before lifting the support clear of the bottom ladder restraint.
2. Refit by inserting the bottom of the ladder into the restraint before fitting the hooks through the locating holes.

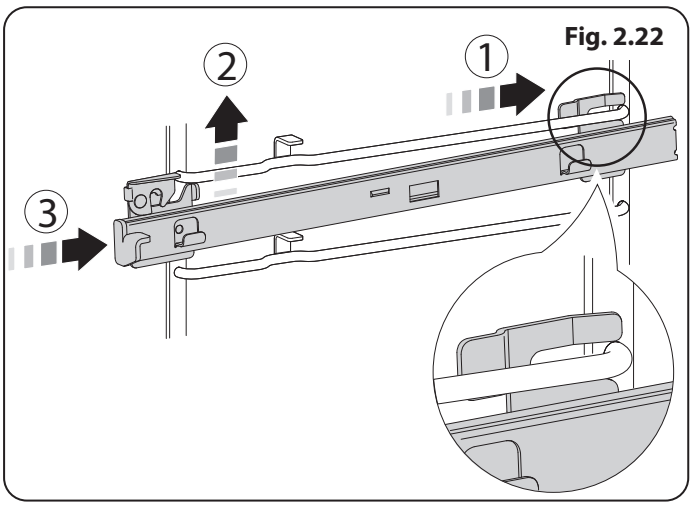

Fig. 2.22

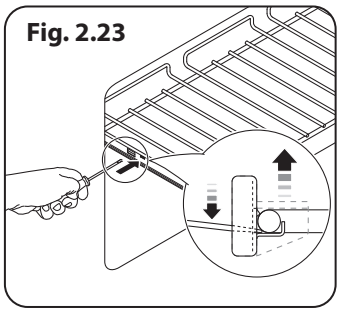
Fig. 2.23

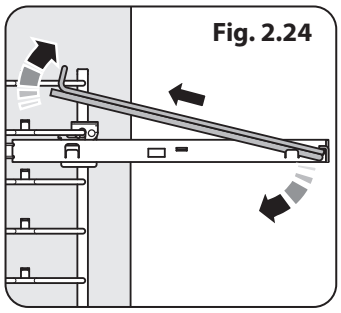
Fig. 2.24

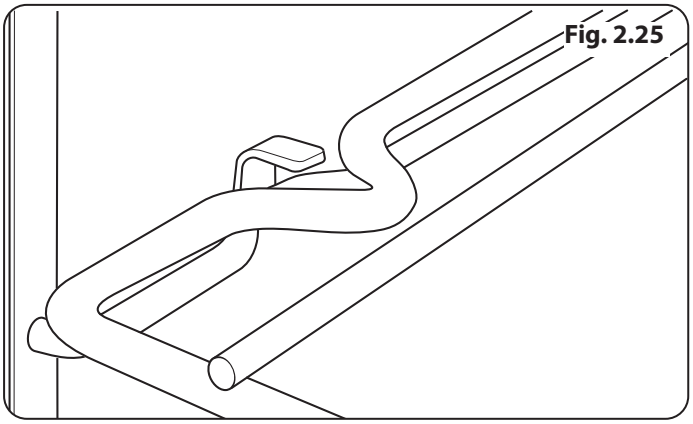
Fig. 2.25

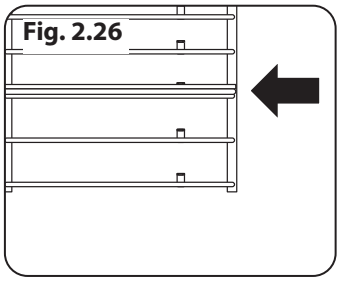
Fig. 2.26

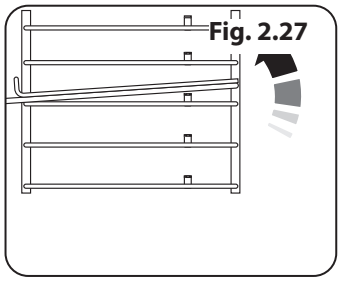
Fig. 2.27

3. Using the Glide-out Broiler™

Fig. 3.1

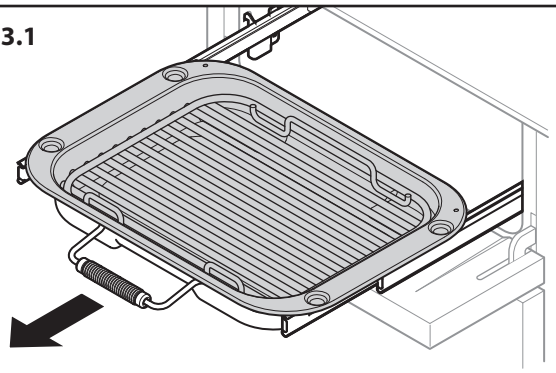

Fig. 3.2

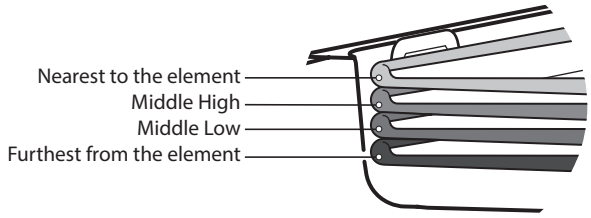

Four grill height positions
refer to **Fig. 3.5**

Fig. 3.3

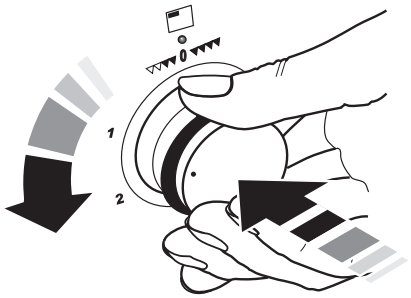

To switch on the right half element

Fig. 3.4

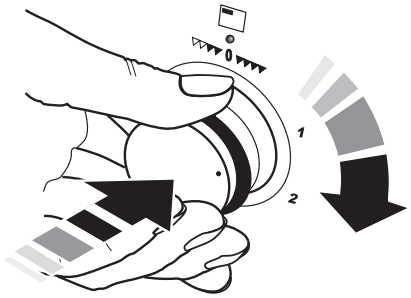

To switch on both element

Four grill height positions **Fig. 3.5**

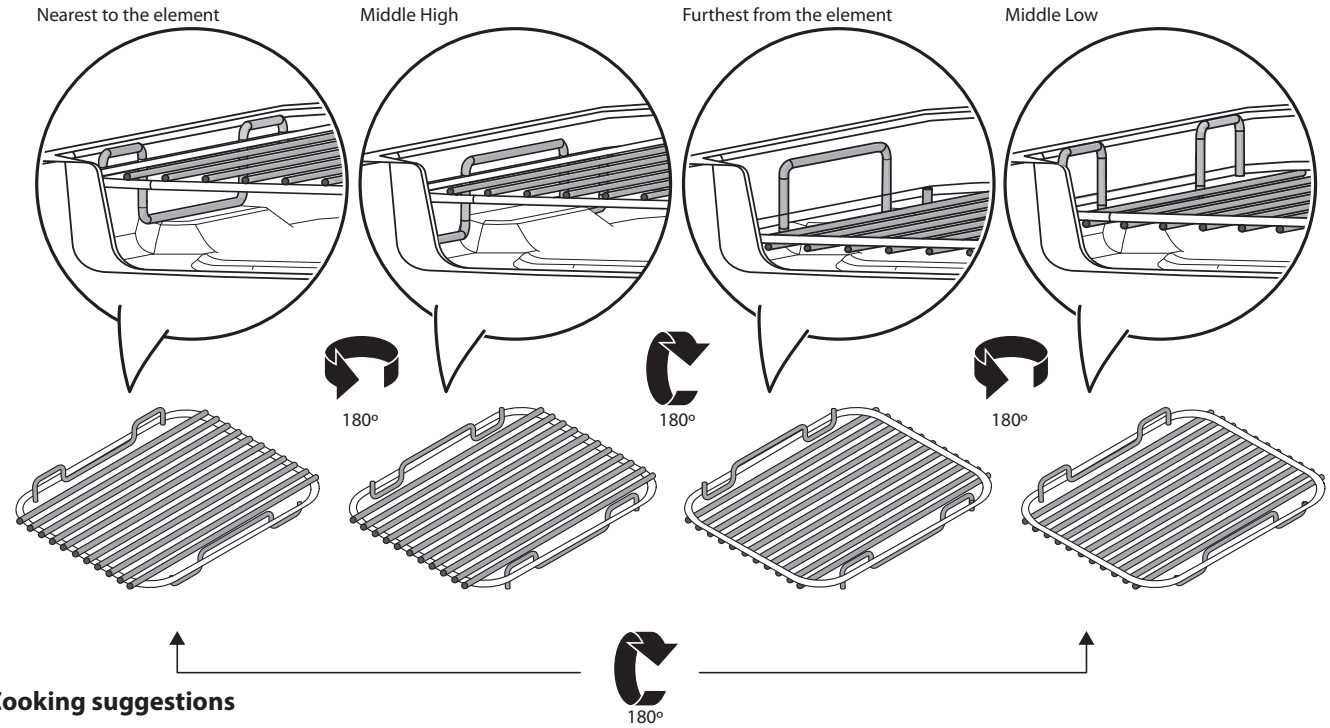

Cooking suggestions

1. Nearest to the element – Toast, steak.
2. Middle high – grilled cheese, sliced vegetables, Canadian peameal bacon.
3. Middle low – fish fillets, vegetable kebabs.
4. Furthest from the element – whole fish, thick pork chops, chicken breasts, chicken or beef kebabs.

NOTE: A short term cooking process has to be supervised continously.

4. Cooking tips

Cooking with a multi-function oven

REMEMBER: not all modes are suitable for all food types. The oven cooking times given are intended as a guide only.

General oven tips

The wire racks should always be pushed firmly to the back of the oven.

Baking trays with food cooking on them should be placed level with the front edge of the oven's wire racks. Other containers should be placed centrally. Keep all trays and containers away from the back of the oven as overbrowning of the food may occur.

When the oven is on, DO NOT leave the door open for longer than necessary, otherwise the knobs may get very hot.

- The telescopic racks with runners can be utilized on levels 2, 3, 4 and 5. It is not possible to utilize the rack on level 1 (**Fig. 4.1**).
- Always leave a 'finger's width' between dishes on the same rack. This allows the heat to circulate freely around them.
- To reduce fat splashing when you add vegetables to hot fat around a roast, dry them thoroughly or brush lightly with cooking oil.
- Where dishes may boil and spill over during cooking, place them on a baking tray.
- If you want to brown the base of a pastry dish, preheat the baking tray for 15 minutes before placing the dish in the center of the tray.

Fig. 4.1

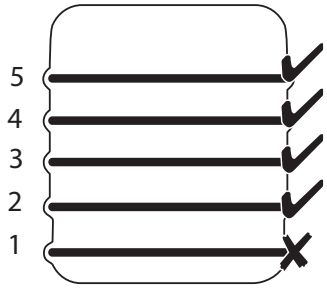

5. Cooking table

The oven control settings and cooking times given in the table below are intended to be used as a guide only. Individual tastes may require the temperature to be altered to provide a preferred result.

Food is cooked at lower temperature in a fan oven than in a conventional oven. When using recipes, reduce the fan oven temperature by 25 °F and the cooking time by 5-10 minutes. The temperature in the fanned oven does not vary with height in the oven so you can use any shelf.

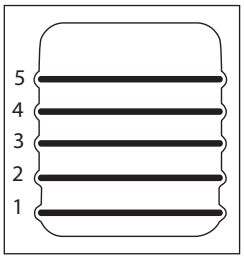

	Conventional oven	Rack position for conventional cooking	Convection oven	
	Temperature °F		Temperature °F	Approximate cooking time
Meat				
Beef (no bone)	300	2	300	30-35 minutes per 1 lb + 30-35 minutes
	375	2	375	20-25 minutes per 1 lb + 20-25 minutes
Lamb	300	2	300	30-35 minutes per 1 lb + 30-35 minutes
	375	2	375	20-25 minutes per 1 lb + 20-25 minutes
Pork & veal	300	2	300	35-40 minutes per 1 lb + 35-40 minutes
	375	2	375	25-30 minutes per 1 lb + 25-30 minutes
Poultry				
Chicken	300	2	300	20-25 minutes per 1 lb + 20-25 minutes
	375	2	375	15-20 minutes per 1 lb + 15-20 minutes
Turkey (slow cook)	300	2	300	25-30 minutes per 1 lb + 25-30 minutes
	375	2	375	20 minutes per 1 lb + 20 minutes
Turkey (fast cook)	300	2	300	20 minutes per 1 lb + 20 minutes
	375	2	375	15 minutes per 1 lb + 15 minutes
Duck/Duckling	300	2	300	20 minutes per 1 lb
Casserole	300	2	300	2-4 hours, according to recipe
Fish				
Fillet	350	2	350	15-20 minutes
Whole	350	2	350	Whole 10 minutes per 1 lb + 10 minutes
Steak out	350	2	350	Steaks according to thickness
Desserts				
Cup cake	325	2	325	20 minutes
Scone	375	2	375	15 minutes
Deep apple pie	350	2	350	45 minutes
Plate tart	350	2	350	45 minutes
Fruit cake 8″ x 3. 5″	275	2	275	1¾-2 hours
Puff pastry	400	2	400	15-40 minutes according to size
Angel food cake	325	2	325	50-60 minutes
Brownies	350	2	350	25-30 minutes
Muffins	350	2	350	25-30 minutes
Cookies	350	2	350	15-20 minutes
Pound cakes	350	2	350	40-60 minutes
Bread	375	2	375	20-30 minutes

6. Cleaning your range

Essential information

Before thorough cleaning, turn off the circuit breaker. Allow the range to cool.

After cleaning remember to switch on the circuit breaker before using the range.

NEVER use paint solvents, caustic cleaners, biological powders, bleach, chlorine based bleach cleaners, coarse abrasives or salt.

DO NOT mix different cleaning products – they may react together with hazardous results.

Recommended cleaning materials are shown in **Table 6.1**.

Cleaning the range – daily care

Cleaning the range is not a welcomed chore, but it has to be done to maintain efficiency and appearance. Remember it is better to wipe up any spills as they occur, this will prevent them burning on and becoming more difficult to remove later.

Make sure the flow of combustion and ventilation air to the range is unobstructed – for example, by build-up of fats or grease.

If the flame is distorted, check that the burner head is correctly placed over the burner base (**Fig. 6.1**).

If the flame burns with a long white tip you should call for service.

Cleaning for spills

For spills and boil-overs that occur while cooking, as soon as possible turn off the burner and allow it to cool. **DO NOT** clean until the area is completely cooled down. Wipe up spills as soon as possible.

DO NOT allow surplus water to seep into the range.

Cooktop burners

The burner heads and caps can be removed for cleaning. Make sure they are absolutely dry before replacing.

When replacing burner head, make sure this locates properly within the base (**Fig. 6.2**). If you look at the bottom of the burner head you will see two 'pips'; these fit into the two notches in the burner base (**Fig. 6.3**). Check burner ports are not blocked. If blockage occurs, remove stubborn particles using a piece of fuse wire.

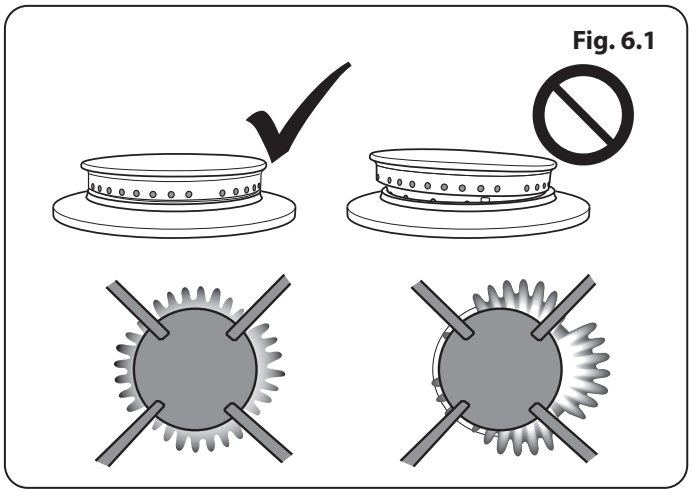

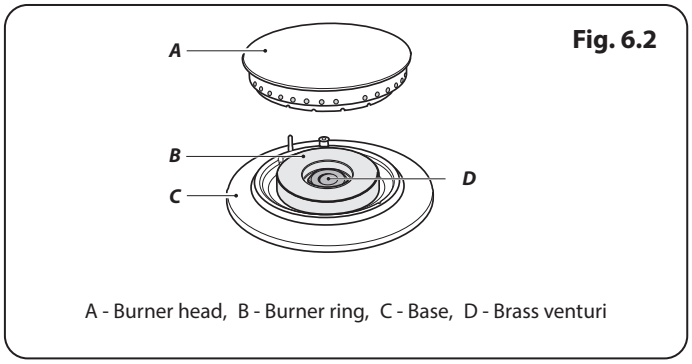

A - Burner head, B - Burner ring, C - Base, D - Brass venturi

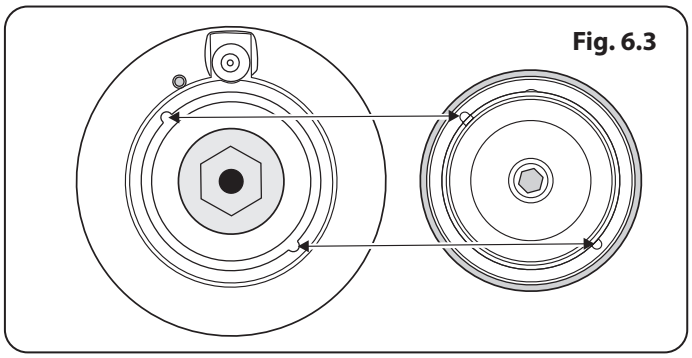

Fig. 6.4

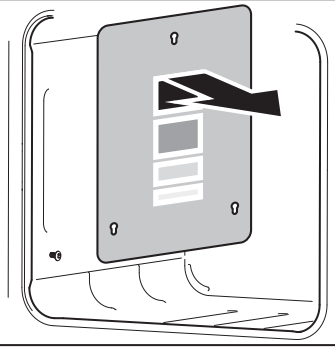

Stainless steel main top

Lift away pots or pans from main top. Remove grates from spillage area and carefully place in a sink of warm soapy water. Wipe loose debris from main top. Avoid using any abrasive cleaners including cream cleaners on brushed stainless steel surfaces. For best results use a liquid detergent cleaner. Rinse with cold water and thoroughly dry with a clean, soft cloth. Make sure all parts are dry before repositioning.

NEVER use caustic or abrasive cleaners as these will damage the surface.

DO NOT use a griddle on your range.

Control panel and oven doors

Avoid using any abrasive cleaners including cream cleaners, on brushed stainless steel surfaces. For best results use liquid detergents.

The control panel and control knobs should only be cleaned with a soft cloth wrung out in clean hot soapy water – but take care that no surplus water seeps into the appliance. Wipe with a clean dampened cloth then polish with a dry cloth. The oven doors should only be cleaned with a soft cloth wrung out in clean hot soapy water.

Ovens

The side panels can be removed for cleaning and for cleaning behind them.

Removing the panels to clean the enamel interior

Some of the lining panels can be removed for cleaning.

If you wish to clean the enamel interior of the oven, you will need to remove the shelves before removing the 'Cook & Clean' panels . You do not have to remove the support brackets to remove the panels. Lift each panel upward and slide forward off the support brackets (**Fig. 6.4**).

Once the panels have been removed, the oven enamel interior can be cleaned.

Refit in the reverse order.

Glide-out broiler™

Before you remove any of the broiler parts for cleaning, make sure that they are cool, or use oven gloves.

Wash the broiler pan, trivet and broiler tray in hot soapy water. Alternatively, wash the broiler pan in a dishwasher.

After broilling meats or any foods that soil, leave to soak for a few minutes in the sink immediately after use. Stubborn particles may be removed from the trivet by using a nylon brush.

1. To remove the broiler pan, pull the tray assembly forwards (**Fig. 6.5**) and then lift the broiler pan clear of the broiler tray assembly (**Fig. 6.6**).
2. For safety, push the broiler tray back into the broiler chamber.
3. If you need to remove the telescopic runners to allow cleaning of the broiler chamber, first remove the broiler tray then you can unhook them from the broiler chamber sides (**Fig. 6.7**).
4. Wipe the sides clean with a soft cloth and mild detergent.

DO NOT put the side runners in a dishwasher.

5. Once you have finished, hook the side rails back onto the sides of the chamber. Pull the telescopic rails out and fit the broiler tray onto them, making sure to locate the cut-outs onto the telescopic runner tabs (**Fig. 6.8**).
6. Replace the broiler pan.

Oven shelf supports

The shelf supports on the oven sides can be removed for cleaning.

Removing the oven shelf supports

Remove the oven shelves: Pull the top of the shelf support up and away from the oven side and then lift the support away from the locating bracket at the bottom of the oven side (**Fig. 6.9**).

Refitting the oven shelf supports

To refit the side support: Locate the tag at the bottom of the support into the slot in the locating bracket in the oven side (**Fig. 6.10**). Now locate the tops of the side arms in the holes at the top and gently push down.

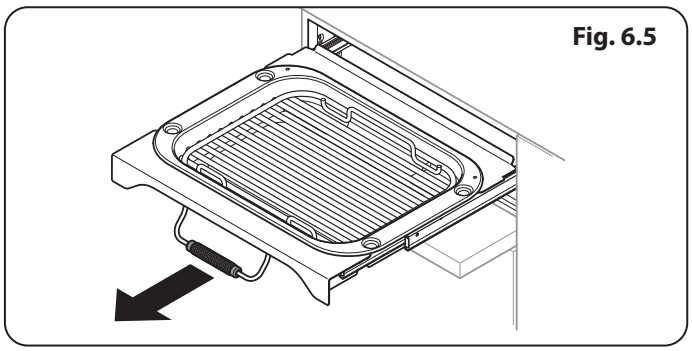

Fig. 6.5

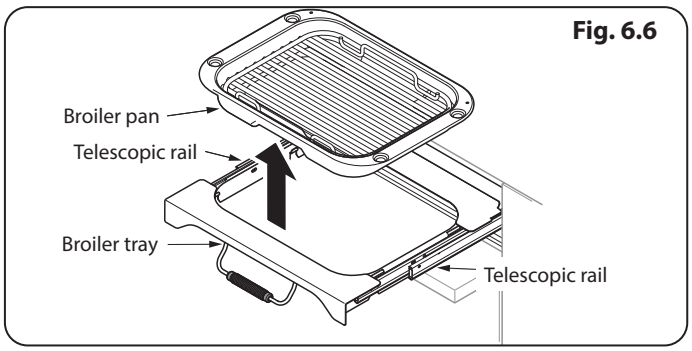

Fig. 6.6

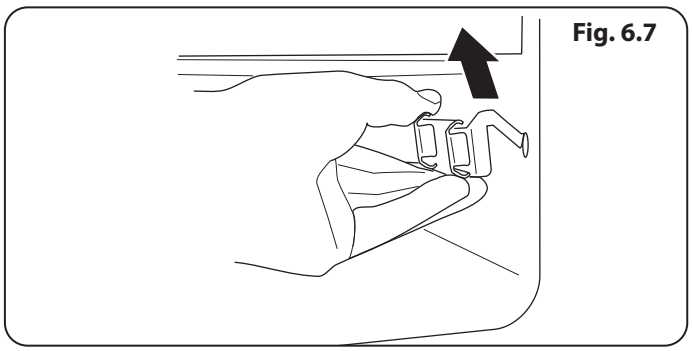

Fig. 6.7

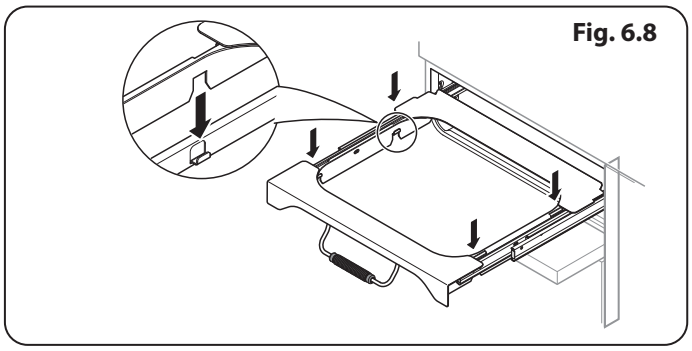

Fig. 6.8

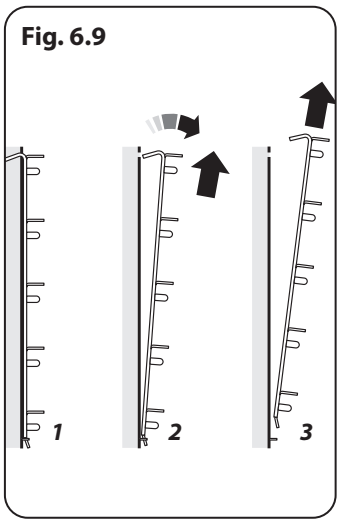

Fig. 6.9

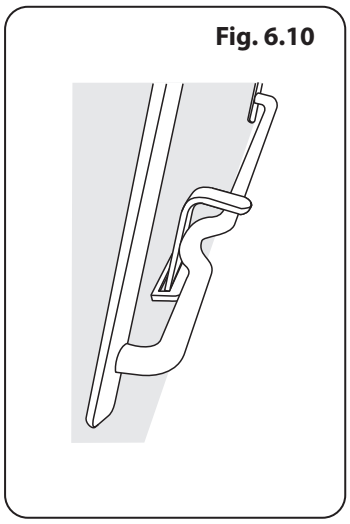

Fig. 6.10

Cleaning table

Cleaners listed (**Table 6.1**) are available from supermarkets or on line.

For enamelled surfaces use a cleaner that is approved for use on vitreous enamel.

Regular cleaning is recommended. For easier cleaning, wipe up any spillages immediately.

Cooktop		
Part	**Finish**	**Recommended Cleaning Method**
Cooktop surface	Enamel or stainless steel	Hot soapy water, soft cloth. Any stubborn stains remove gently with a mildly abrasive cleaner such as Bon Ami® or Soft Scrub
Burner grates & top of burner heads	Porcelain enamel	Mildly abrasive cleaner such as Bon Ami® or Soft Scrub®.
Outside of range		
Part	**Finish**	**Recommended Cleaning Method**
Door, door surround and storage drawer exterior	Enamel or paint	Hot soapy water, soft cloth. Any stubborn stains, remove with gentle detergent.
	Stainless steel	Chrome & Steel Cleaner and buff with a microfiber cloth.
Sides and plinth	Painted surface	Hot soapy water, soft cloth. Enamel cleaner or chrome & steel cleaner respectively, if necessary.
Back Splash/rear grille	Enamel or stainless steel	Hot soapy water, soft cloth. Cream cleaner, with care, if necessary.
Control panel	Paint, enamel or stainless steel	Warm soapy water. Do not use abrasive cleaners on lettering.
Control knobs/handles & trims	Mercury knobs are aluminium	Warm soapy water, soft cloth. Chrome & steel cleaner if necessary.
Oven door glass/glass lid	Toughened glass	Hot soapy water, non-abrasive cleaner if necessary.
Oven and Broiler		
Part	**Finish**	**Recommended Cleaning Method**
Sides, floor and roof of oven (see below)	Enamel	Any proprietary oven cleaner that is suitable for enameled ovens. **CAUTION:** corrosive/caustic oven cleaners: follow manufacturer's instructions. **DO NOT** allow contact with the oven elements
Oven interior	Porcelain enamel	Branded oven cleaner suitable for enamel surfaces.
Oven shelves, Handyrack, broiler trivet, Handygrill rack	Chrome	An oven interior cleaner that is suitable for chrome. Soap filled pad. Dishwasher.
Broiler pan/meat tin (some models only)	Enamel	Hot soapy water. Soap filled pad. Dishwasher.

Table 6.1

7. Troubleshooting

All servicing and repairs must be carried out by a qualified service engineer.

Ignition or cooktop burners faulty

Is the power on?

Are the sparker (ignition electrode) or burner holes blocked by debris?

Are the burner heads correctly located? See the section entitled 'Cleaning'.

Remember that each cooktop burner has a special safety device that stops the flow of gas if the flame goes out. When lighting a cooktop burner the safety device has to be overridden by holding in the control knob so that the gas can flow. This allows the flame sensor to heat up and operate the safety device. Keep holding the knob pressed in to let the gas through to the burner for few seconds. The igniter should spark and light the gas.

If, when you let go of the control knob, the burner goes out, the safety device has not held in. Turn the control to the off position and wait one minute, then try again this time holding in the control knob for slightly longer.

Burners will not light

If only one or all the cooktop burners will not light, make sure that the parts have been replaced correctly after wiping or removing for cleaning.

Check that there is not a problem with your gas supply. You can do this by making sure that other gas appliances you may have are working.

Do the burners spark when you push in the control knob? If not check the power is on.

Steam is coming from the oven

When cooking foods with a high water content (e.g. roast chips) there may be some steam visible at the rear grille. Take care when opening the oven door, as there may be a momentary puff of steam when the oven door is opened. Stand well back and allow any steam to disperse.

An oven fan is noisy

The note of the oven fan may change as the oven heats up – this is perfectly normal.

What cleaning materials are recommended for the range?

See the 'Cleaning' section for a full list of recommended cleaning materials.

We DO NOT recommend corrosive or caustic cleaners as these may damage your range.

The knobs get hot when I use the oven, can I avoid this?

Yes, this is caused by heat rising from the oven, and heating them up. **DO NOT** leave the oven door open.

The fascia gets hot when I use the oven or broiler

The range is cooled by a fan. If the fascia becomes excessively hot when the range is in use then the cooling fan may have failed. Should this occur please contact your installer, a qualified repair engineer or Customer Service to arrange for its repair.

If there is an installation problem and I don't get my original installer to come back to fix it, who pays?

You do. Service organizations will charge for their call outs if they are correcting work carried out by your original installer. It is in your interest to track down your original installer.

Food is cooking too slowly, too quickly, or burning

Cooking times may differ from your previous oven. Check that you are using the recommended temperatures and shelf positions.

See the oven cooking guide section of the instructions. The oven control settings and cooking times are intended to be used only as a guide.

Individual tastes may require the temperature to be altered either way, to get the results you want. Try cooking at a higher or lower temperature setting.

The oven is not cooking evenly

If you are cooking a large item, be prepared to turn it round during cooking.

If two shelves are used, check that space has been left for the heat to circulate. When a baking sheet is put into the oven, make sure it is placed centrally on the shelf.

Check that the door seal is not damaged.

A dish of water when placed on the shelf should be the same depth all over. (For example, if it is deeper at the back, then the back of the range should be raised up or the front lowered.)

If the range is not level arrange for your supplier to level it for you.

Fig. 7.1

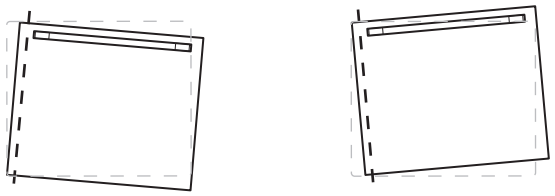

Effect of hinge adjustment – exaggerated for clarity

Fig. 7.2

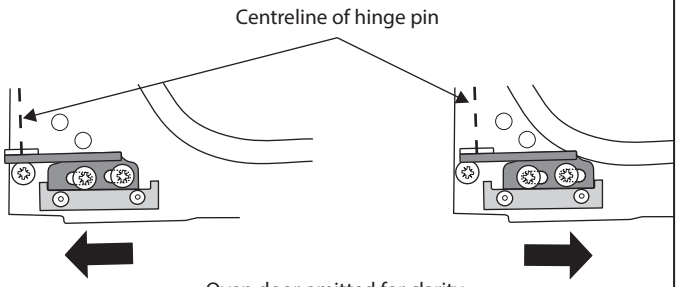

Oven door omitted for clarity

Oven not coming on

Is the power on?

If not there may be something wrong with the power supply. Is the range supply on at the circuit breaker?

Have you set a cooking function?

Oven temperature getting hotter as the range gets older

If turning the knob down has not worked or only worked for a short time then you may need a new thermostat. This should be changed by a qualified service engineer.

The door is misaligned

The bottom hinge of either oven door can be adjusted to alter the angle of the door (**Fig. 7.1**). Loosen the bottom hinge fixing screws and use the notch and a flat bladed screwdriver to move the position of the hinge to set the hinge position (**Fig. 7.2**).

8. Installation Instructions

WARNING!

If the information in these instructions is not followed exactly, a fire or explosion may result, causing property damage, personal injury or death.

DO NOT store or use gasoline or other flammable vapors and liquids in the vicinity of this or any other appliance.

WHAT TO DO IF YOU SMELL GAS

DO NOT try to light any appliance.

DO NOT touch any electrical switch.

DO NOT use any phone in your building.

Immediately call your gas supplier from a neighbor's phone. Follow the gas supplier's instructions.

If you cannot reach your gas supplier, call the fire department.

Installation and service must be performed by a qualified installer, service agency or the gas supplier.

WARNING!

The anti-tip device supplied with this range must be installed when the appliance is installed. This will reduce the risk of tipping of the appliance from abnormal usage or by excessive loading of the oven door.

⚠WARNING!

- **ALL RANGES CAN TIP. A CHILD OR ADULT CAN TIP THE RANGE AND BE KILLED.**
- **INSTALL ANTI-TIP BRACKET PACKED WITH RANGE - SEE INSTALLATION INSTRUCTIONS.**
- **A CHILD OR ADULT CAN TIP THE RANGE AND BE KILLED**
- **ENGAGE THE RANGE TO THE ANTI-TIP DEVICE - SEE INSTALLATION INSTRUCTIONS.**
- **RE-ENGAGE THE ANTI-TIP DEVICE IF THE RANGE IS MOVED.**
- **FAILURE TO DO SO CAN RESULT IN DEATH OR SERIOUS BURNS TO CHILDREN OR ADULTS.**

The following symbols are related to safety and are used on the product and throughout this manual.

Meaning / Description	Symbol
WARNING / CAUTION An appropriate safety instruction should be followed or caution taken if a potential hazard exists.	
DANGEROUS VOLTAGE To indicate hazards arising from dangerous voltages.	
PROTECTIVE EARTH (GROUND) To identify any terminal which is intended for connection to an external conductor for protection against electric shock in case of a fault, or the terminal of a protective earth (ground) electrode.	

Meaning / Description	Symbol
HEAVY This product is heavy and reference should be made to the safety instructions for provisions of lifting and moving.	
DISCONNECT MAINS SUPPLY Disconnect incoming supply before inspection or maintenance.	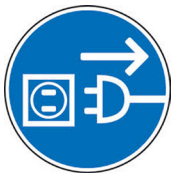

9. Service and parts

Firstly, please complete the appliance details below and keep them safe for future reference – this information will enable us to accurately identify the particular appliance and help us to help you. Filling this in now will save time and inconvenience if you later have a problem with the appliance. It may also be of benefit to keep your purchase receipt with this leaflet. You may be required to produce the receipt to validate a warranty field visit.

Dealer's Name and Address	
Name of Appliance	
Appliance Serial Number*	
Fuel Type	
Date of Purchase	
Installer's Name, Address and Telephone No.	
Date of Installation	

* This information is on the appliance data badge.

If you have a problem

In the unlikely event that you have a problem with your appliance, please refer to the rest of this booklet, especially the problem solving section, first to check that you are using the appliance correctly.

If you are still having difficulty, please contact Tech Support at 800.914.4799 or email techsupp@middlebyresidential.com.

Please note

For warranty information or to register your AGA range, email customersupport@middlebyresidential.com. You may also refer to the warranty document provided with the appliance or contact 888.845.4641 Option 3.

Out of warranty

We recommend that our appliances are serviced regularly throughout their life to maintain the best performance and efficiency. The frequency of service will depend on usage – for normal usage once a year should suffice. Service work should only be carried out by a suitably Authorized Person.

Spare parts

To maintain optimum and safe performance, we recommend that only genuine spare parts are used. **DO NOT** use re-conditioned or unauthorized controls. Contact 888.845.4641 Option 1 or email parts@middlebyresidential.com.

10. Installation safety instructions

Regulations

Installation of this range must conform with local codes, or in the absence of local codes, with the National Fuel Gas Code, ANSI Z223.1/NFPA.54, latest edition.

In Canada, installation must conform with the current Natural Gas Installation Code, CAN/CGA-B149. 1 or the current Propane Installation Code, CAN/CGA-B149.2, and with local codes where applicable.

In Canada, electrical grounding must be in accordance with the current CSA C22.1 Canadian Electrical Code Part 1 and/or local codes. See 'Electrical Connection' in this section.

CSA 1.1, latest edition and CAN/CGA-22.2 latest edition.

This range becomes hot in use, the cooktop burners produce exhaust gases.

IMPORTANT

Observe all governing codes and ordinances.

The range must be properly grounded.

This appliance is heavy. Ensure you have the correct facilities to complete the move. To find the weight of the appliance, refer to the "Technical data".

Refer to "Positioning the range".

Save these instructions for the local electrical inspector's use.

For your safety

DO NOT store or use combustible materials, gasoline or other flammable vapors and liquids in the vicinity of this or any other appliance.

If you smell gas,

- open windows.
- **DO NOT** touch electrical switches.
- Extinguish any open flame.
- Immediately call your gas supplier.

Improper installation, adjustment, alteration, service or maintenance can cause injury or property damage. Refer to this manual. For assistance or additional information, consult a qualified engineer.

NEVER reuse old flexible connectors. The use of old flexible connectors can cause gas leaks and personal injury. Always use NEW flexible connectors when installing a gas appliance.

IMPORTANT!

- Remove all packing material and literature from oven before connecting gas and electrical supply to range.
- Have your range installed by a qualified installer.
- **DO NOT** install your range on a substrate that cannot withstand 180 °F (82 °C).
- **DO NOT** install your range directly onto carpeting. Ensure an appropriate, non-combustible, substrate is installed prior to installing the range.
- Make sure the wall coverings around the range can withstand heat generated by the range up to 200 °F (93 °C).
- There must be a gap of at least 30" (762 mm) between the top of the range and any combustible surface above it.
- If a ventilating hood is installed above the range follow the installation instructions supplied with the hood.

This type of ventilation system may cause ignition and combustion problems with the gas cooking appliance, resulting in personal injury or unintended operation. Ventilating systems that direct the air upwards can be used.

Items of interest to children should not be stored above a range – children climbing on the range to reach items could be seriously injured.

Converting to propane gas

This appliance is supplied set for natural gas.

A conversion kit for Propane gas is supplied with the range **(A060048)**.

The conversion must be performed by a qualified LP gas installer.

⚠ **For installation 5000 ft above sea level, the appliance must be converted using high altitude kit A065744. Contact your distributor.**

Location of the range

The range may be installed in a kitchen/kitchen dining area but **NOT** in a room containing a bath or shower.

The range is freestanding and should not be placed on a separate base.

DO NOT locate the range where it may be subject to strong drafts. Any openings beneath the range or behind the range should be sealed.

The range should be positioned on a solid substrate.

⚠ **Your range is heavy DO NOT place on soft floor coverings, such as cushioned vinyl or carpeting.**

Use care when moving the range on cushioned vinyl or carpeted flooring.

When the floor covering ends at the front of the range, the area that the range will rest on should be built up to the same level or higher than the floor covering.

⚠ **Also, make sure your floor covering will withstand 180°F. (See the Installation Safety Instructions section).**

⚠ **(See the Installation Safety Instructions section).**

11. Installation

You will need the following equipment to complete the range installation satisfactorily:

- Multimeter (for electrical checks).
- Allen keys (provided in pack).

You will also need the following tools:

1. Steel tape measure
2. Cross-head screwdriver
3. Flat head screwdriver
4. Spirit level
5. 9⁄16 " (13 mm) wrench or socket wrench
6. 5⁄16 " (8 mm) socket wrench or ring wrench

Additional materials you may need:

1. Gas line shut-off valve.
2. Pipe joint sealant or UL-approved pipe thread tape with Teflon* that resists action of natural and LP gases.
3. Flexible metal appliance connector (½" I.D.). A 5 foot length is recommended for ease of installation but other lengths are acceptable. Never use an old connector when installing a new range.
4. Flare union adapter for connection to gas supply line (¾" or ½" NPT x ½" I.D.).
5. Flare union adapter for connection to pressure regulator on range (½" NPT x ½" I.D.).
6. To protect any floor covering under the range a sheet of ¼" thick plywood or equivalent large enough to stand the range on.

Included Accessories:	
6 interlocking cast iron grates	Wok Cradle
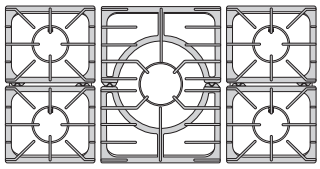	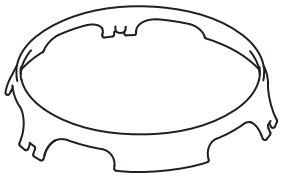
Broiler pan & trivet	Broiler pan cradle
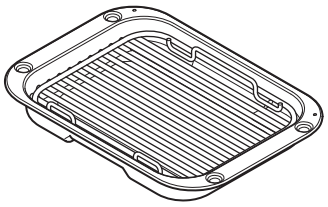	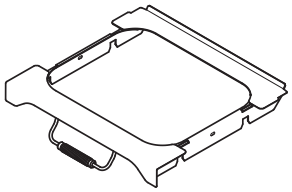
1 drop shelf	2 flat shelves
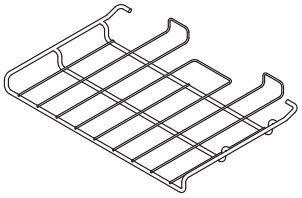	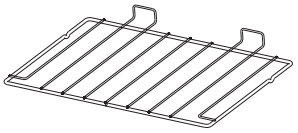
2 telescopic shelves	2 Oven Base Trays
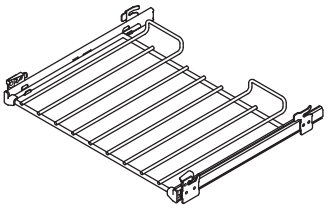	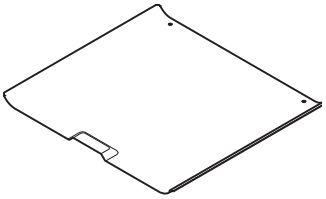

Positioning the range

Fig. 11.1, **Fig. 11.2** and **Fig. 11.3** show the minimum recommended distance from the range to nearby combustible surfaces (see **Table 11.1**).

We recommend a gap of no more than 3⁄16" (5 mm) (see **Table 11.1**) either side of the appliance for moving the range. It must be possible to move the range in and out for cleaning and servicing.

Above hotplate surround should be level with, or above, any adjacent work surface (**Fig. 11.1**).

*Any rangehood should be installed in accordance with the hood manufacturer's instructions.

**Any splashback must be fitted in accordance with the manufacturer's instructions. Allowance should be made for the additional height of the flue trim, which is fitted to the rangetop.

Surfaces of furniture and walls at the sides and rear of the appliance should be heat, splash and steam resistant. Certain types of vinyl or laminate kitchen furniture are particularly prone to heat damage and discoloration.

We cannot accept responsibility for damage caused by normal use of the range to any material that de-laminates or discolors at temperatures less than 149°F/65°C above room temperature.

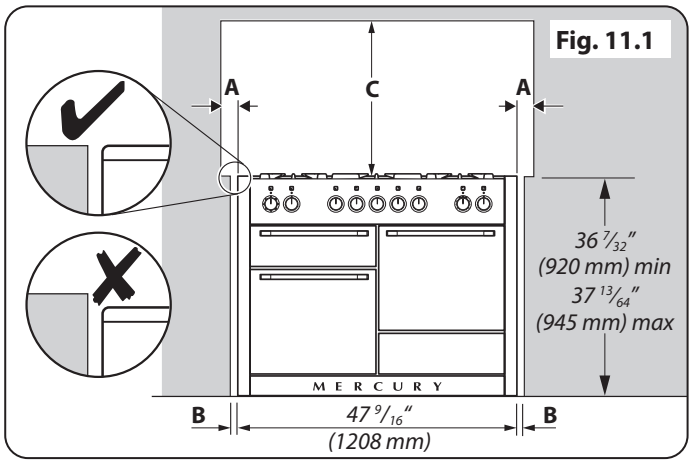

Fig. 11.1

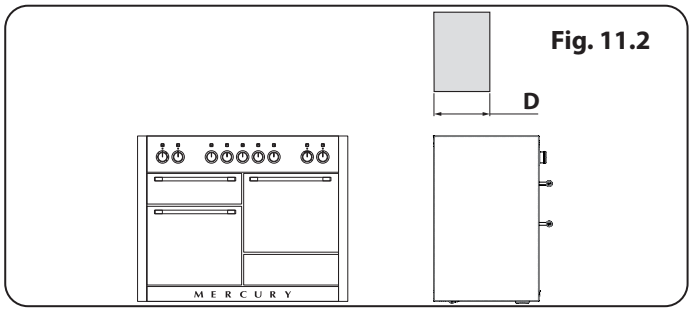

Fig. 11.2

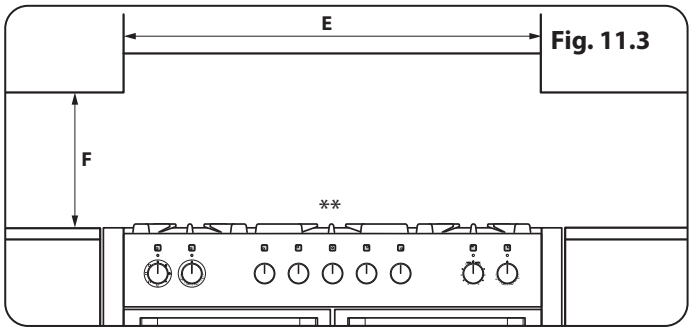

Fig. 11.3

Clearances to combustibles

Dimension	Description	USA	Canada
A	Gap between side of appliance and adjacent vertical surface ABOVE cooktop level	1 3⁄16" (30 mm) 1	1 3⁄16" (30 mm) 1
B	Gap between side of appliance and adjacent vertical surface BELOW cooktop level	3⁄16" (5 mm)	½" (12 mm)
C	Gap between cooktop level and any horizontal combustible surface	31 ½" (800 mm) 2	31 ½" (800 mm) 2
D	Maximum depth of cabinets installed above the top surface cooking sections	13" (330 mm)	13" (330 mm)
E	Minimum distance between horizontal surfaces less than dimension C	47 7⁄16" (1208 mm)	47 7⁄16" (1208 mm)
F	Minmum distance between horizontal cabinets and worktop surfaces adjacent to range	16 5⁄32" (410 mm)	16 5⁄32" (410 mm)
1.	For non-combustible surfaces (such as unpainted metal or ceramic tiles) this gap is not required		
2.	This dimension can be reduced to 24" (610 mm) if the bottom of the wooden or painted metal cabinet is preserved with a non-combustible material		

Table 11.1

Fig. 11.4

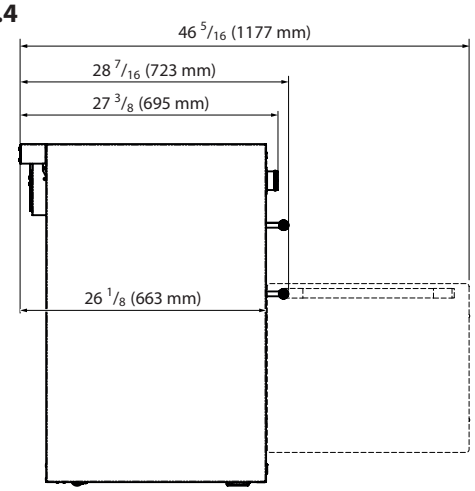

Fig. 11.5

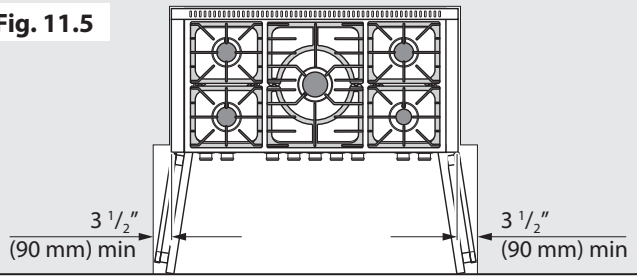

Fig. 11.6

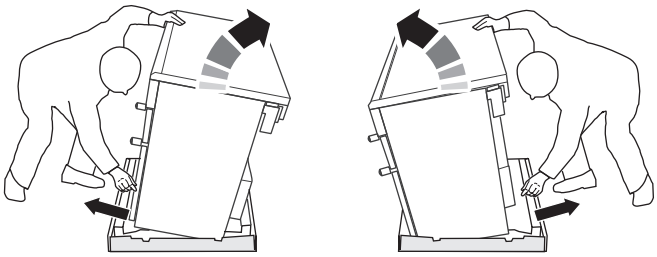

The depth of the range is 28 7/16" (723 mm) overall (**Fig. 11.4**).

If the range is near a corner of the kitchen, a clearance of 3 ½" (90 mm) is required to allow the oven doors to open (**Fig. 11.5**). The actual opening of the doors is slightly less but this allows for some protection of your hand as you open the door.

When fitting between kitchen cabinets

We recommend a gap of 48" (1218 mm) between units to allow for moving the range. **DO NOT** box the range in – it must be possible to move the range in and out for cleaning and servicing.

In the USA leave a gap of at least ⅕" (5 mm) on either side of the range (a 48" (1218 mm) gap between units). The range should be positioned centrally.

For Canada leave a gap of at least ½" (12 mm) on either side of the range (a 48 ½" (1232 mm) gap between units). The range should be positioned centrally.

We also recommend that you **DO NOT** final fix any adjacent cabinets until the range is installed. Decorative mouldings or handles on cabinet doors and fronts may interfere with the opening of the oven doors.

Moving the range

On no account try and move the range while it is plugged into the electricity supply.

This appliance is heavy. Ensure you have the correct facilities to complete the move. To find the weight of the appliance refer to the "Technical data".

We recommend that two people maneuver the range. Make sure that the floor covering is firmly fixed, or removed, to prevent it being disturbed when moving the range around.

To help you, there are two levelling rollers at the back, and two screw-down levelling feet at the front.

Remove the polystyrene base pack. From the front, tilt the range forward and remove the front half of the polystyrene base (**Fig. 11.6**). Repeat from the back and remove the rear half of the polystyrene base. Also remove the cardboard base tray.

12. Fitting the flue, flue vent and side panels

Fitting the knobs

1. Gently push-fit the control knobs onto the spindles.

Fitting the flue

1. Remove the four screws from the broiler flue opening (**Fig. 12.1**).
2. Present the removable flue up to broiler flue opening. Make sure that the bottom flange of the removable flue fits inside the fixed flue, secure in place with the four screws (**Fig. 12.1**).

Fitting the flue vent

1. Loosen the three nuts and bolts in the back of the hotplate (**Fig. 12.2**).
2. Fit the flue vent over the bolts and slide down (**Fig. 12.2**). Tighten the nuts to secure.

Checking the parts:

Flue	Flue Vent
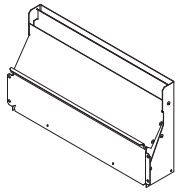	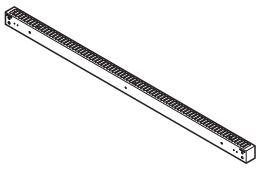
Fan Assembly	Control knobs x 9
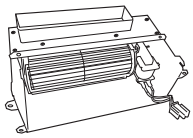	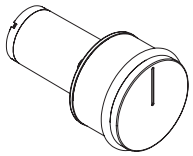

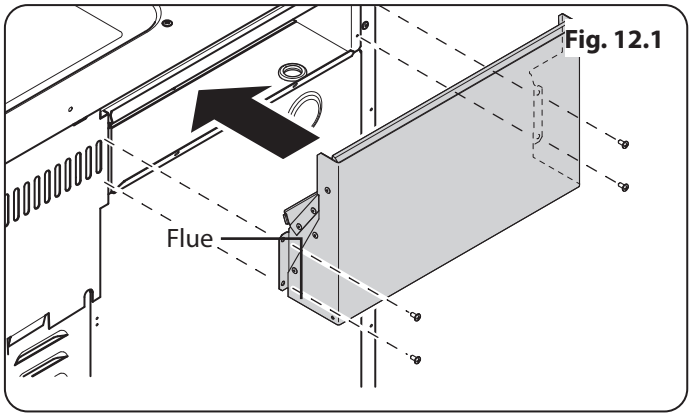

Fig. 12.1

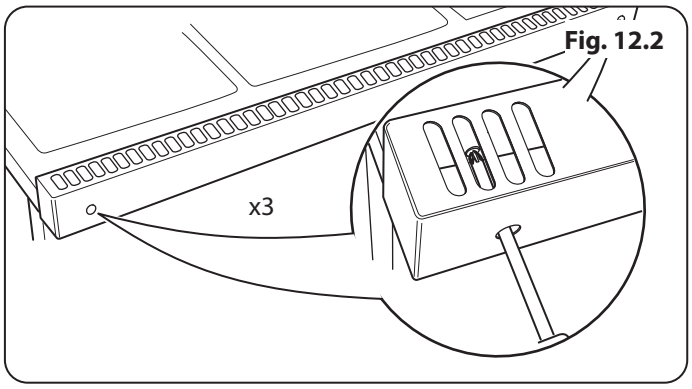

Fig. 12.2

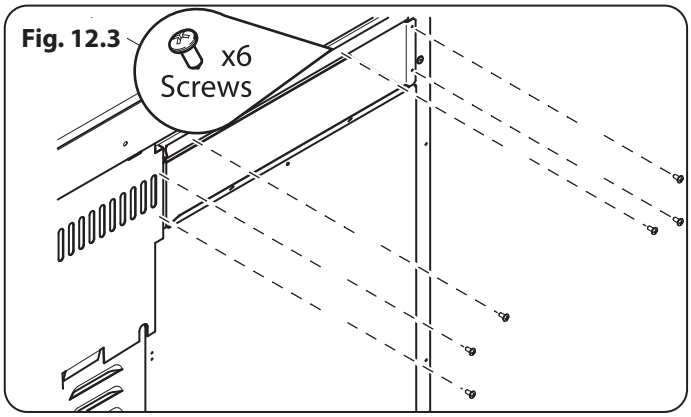

Fig. 12.3

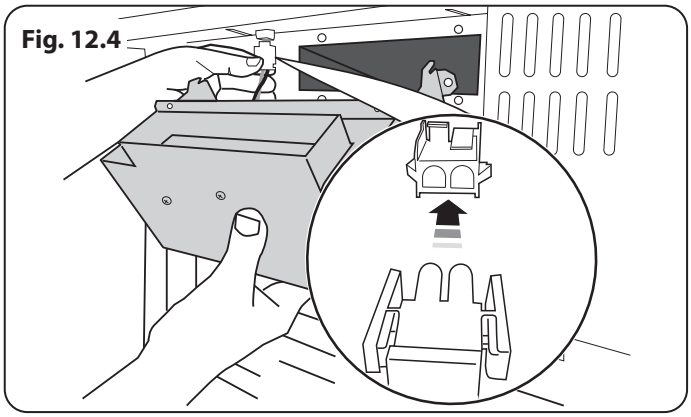
Fig. 12.4

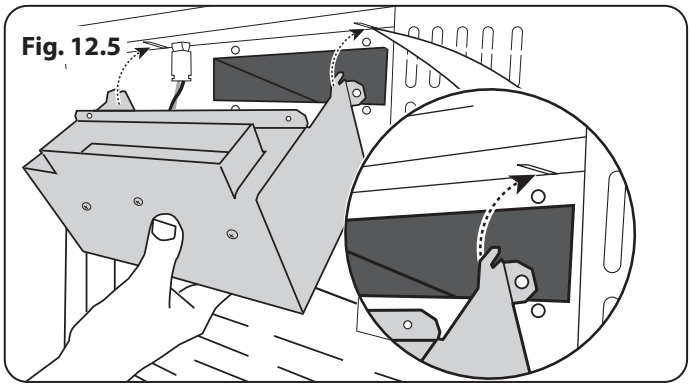
Fig. 12.5

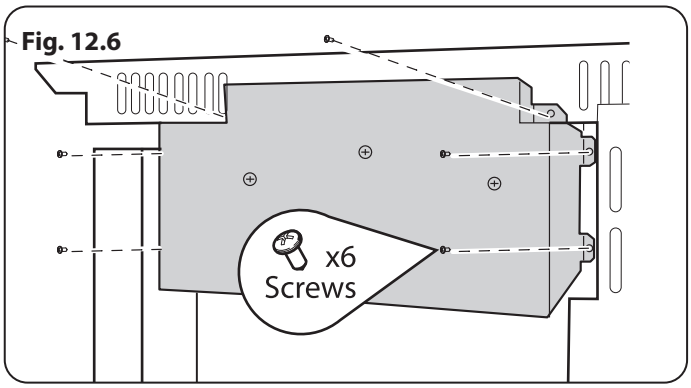

Fig. 12.6

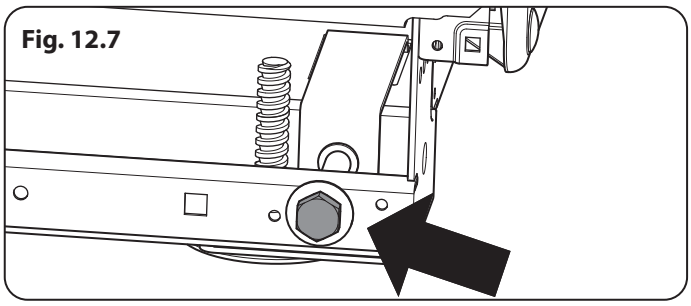
Fig. 12.7

Fitting the cooling fan box

1. Remove the six screws where the cooling fan box will be fixed **Fig. 12.3**.
2. The shape of the molex plug should match the socket. Gently connect the molex plug to the molex connector socket **Fig. 12.4**.
3. The cooling fan has two tabs which connects to the slots underneath the flue vent. Gently align the cooling fan box tabs to the slots underneath the flue vent **Fig. 12.5**.
4. Replace the six screws **Fig. 12.6**.

Before fitting the side panels, it is recommended that the required height of the range is set. This will simplify the Side Panels fitting procedure.

Setting the height

You are recommended to use a spirit level on the hotplate to check the range is level.

The front feet and rear rollers can be adjusted to level the range (**Fig. 12.7**).

1. To adjust the height of the rear of the range, fit a 13 mm spanner or socket wrench onto the hexagonal adjusting nut.
2. Rotate the nut – clockwise to raise – counter-clockwise to lower. Make sure to lower **BOTH REAR ROLLERS**.
3. To set the front turn the feet bases to raise or lower.

Checking the parts:	
Side panel rear retaining brackets A052064 - Right-hand A052067 - Left-hand	Side panels A065523 - Right-hand A065521 - Left-hand
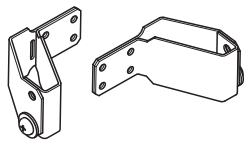	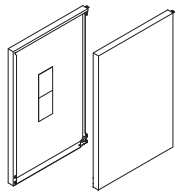
Obscuring Trim Side Panel x2 Q050718	Bottom Panel (Toe kick) Color matched to range
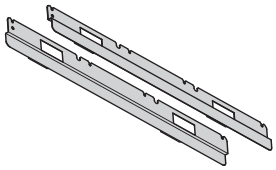	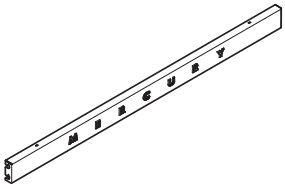
Bottom Panel (Toe kick) Front Mounting Brackets A052124	Screws supplied 2x Machine Screw 2x Self-Tapping Screw
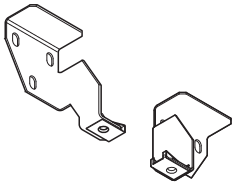	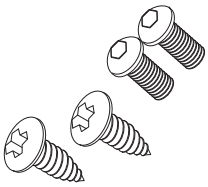

Fitting the side panel rear retaining brackets

1. Located at the bottom left and right **rear** corner of the range, remove the two screws (**Fig. 12.8**).
2. Fit the left and right retaining brackets to the base frame and refit and tighten the screws (**Fig. 12.8**).

Fig. 12.8

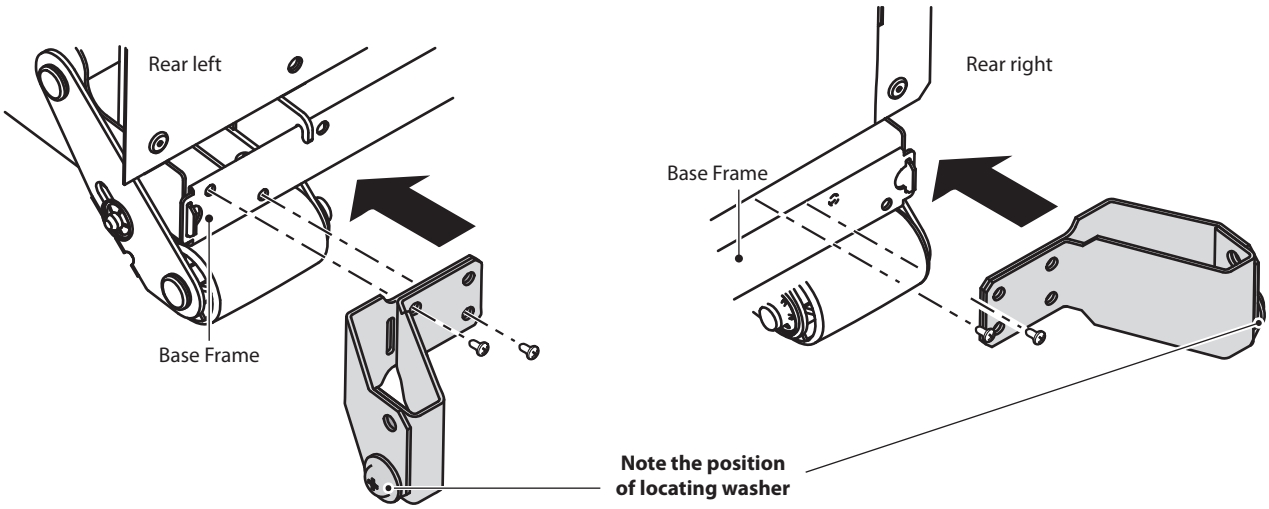

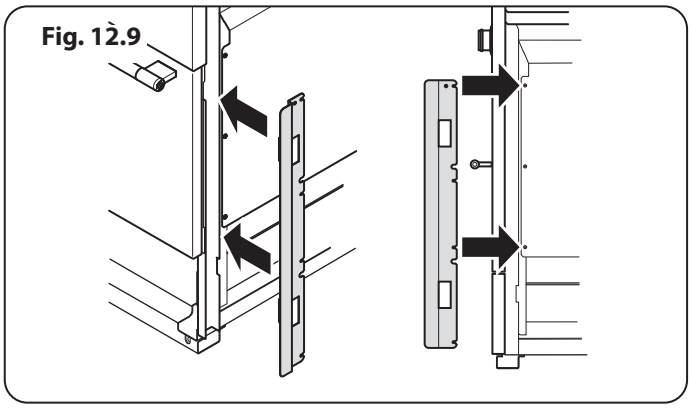

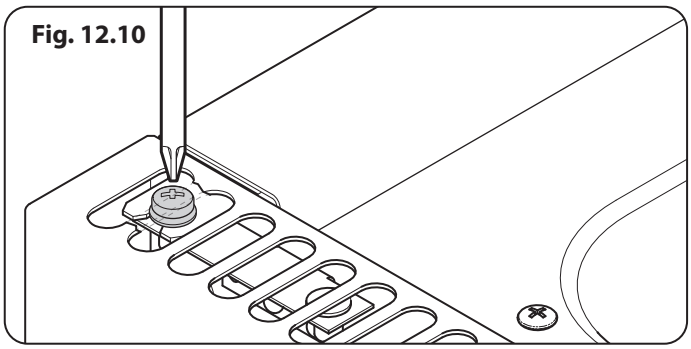

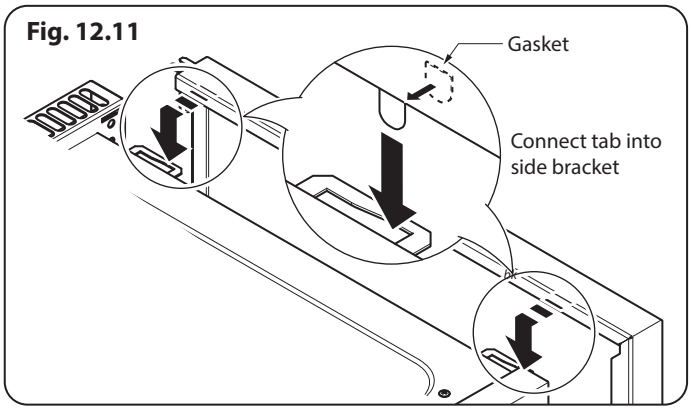

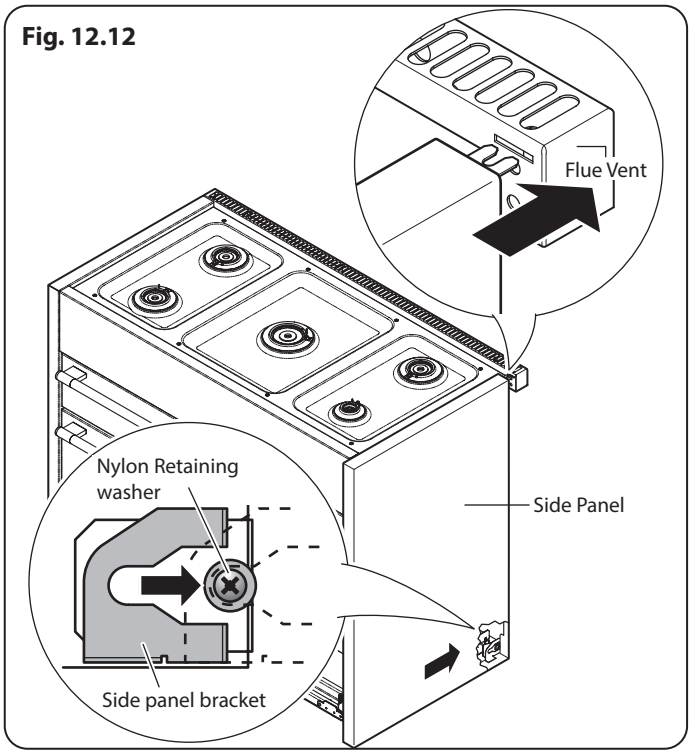

Fitting the obscuring trims

1. Located near the front on each side of the range there are three screws. Loosen the top and bottom screws (**Fig. 12.9**).
2. Slide the trim onto the screws and tighten to secure.

Fitting the side panels

1. Loosen the screw in the flue vent (**Fig. 12.10**).
2. Inside the top of the side panel top are two tabs. Attach the self adhesive gaskets to each tab and connect these tabs into the cut-outs in the top edge of the range (**Fig. 12.11**).
3. Slide the side panel back so that the **side panel bracket** in the base connects to the **rear retaining washer** and the slotted tab at the top rear connects onto the screw in the flue vent (**Fig. 12.12**).
4. Check everything is firmly connected and tighten the screw in the flue vent to secure the side panel in position (**Fig. 12.10**).

NOTE: The bottom front of the side panels will be loose. These are secured once the bottom panel (toe kick) is fitted.

NOTE: If a side panel is loose, fit one of the extra gaskets to the inner face of the front bracket locating tabs and refit.

Fitting the front mounting brackets

1. Open the right-hand oven door and pull the drawer out to its furthest point.
2. Push the ends of the plastic clips (**Fig. 12.13** and **Fig. 12.14**) to release the catches holding the drawer to the side runners. At the same time pull the drawer forward and away from the side runners.

⚠ **For safety's sake make sure the drawer runners are out of the way.**

3. On the front of the range base there are two mounting plates. Remove the three fixing screws from each plate (**Fig. 12.15**).
4. Fit the left and right-hand front mounting brackets as shown in (**Fig. 12.15** and **Fig. 12.16**). **DO NOT over tighten the mounting screws at this stage.**

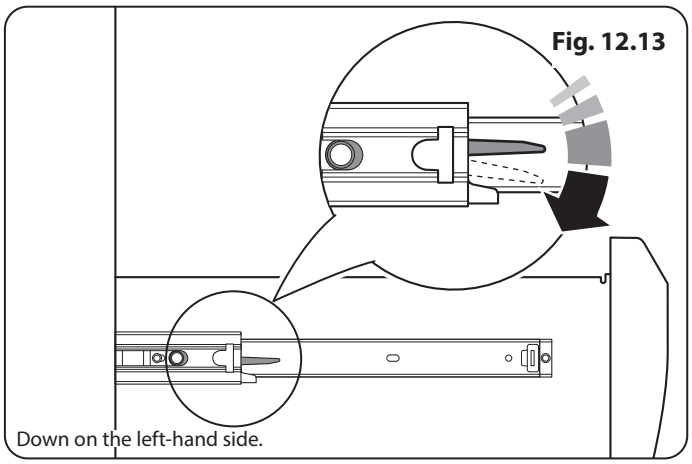

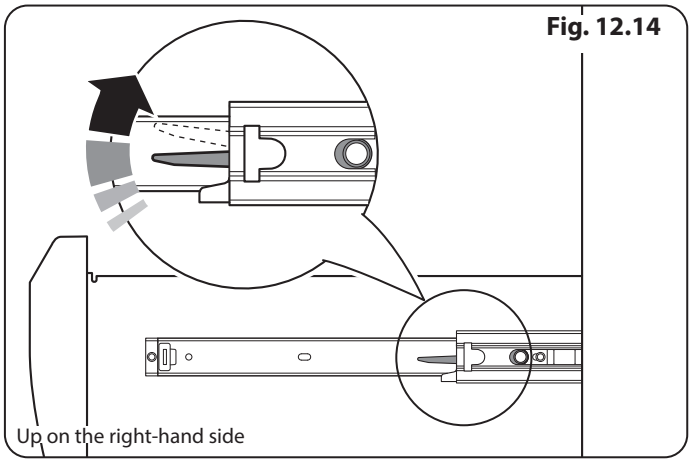

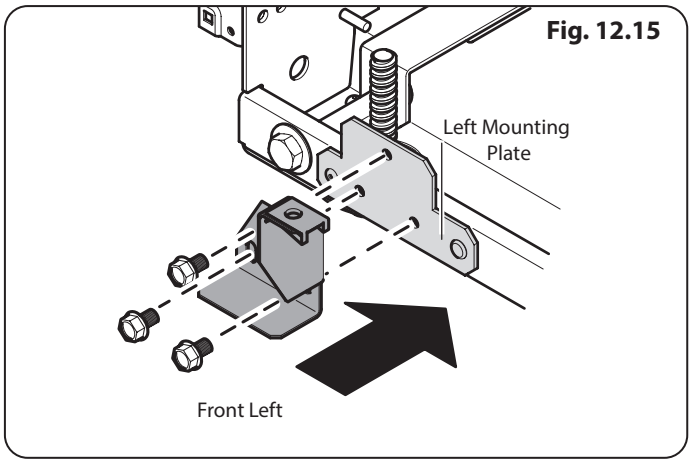

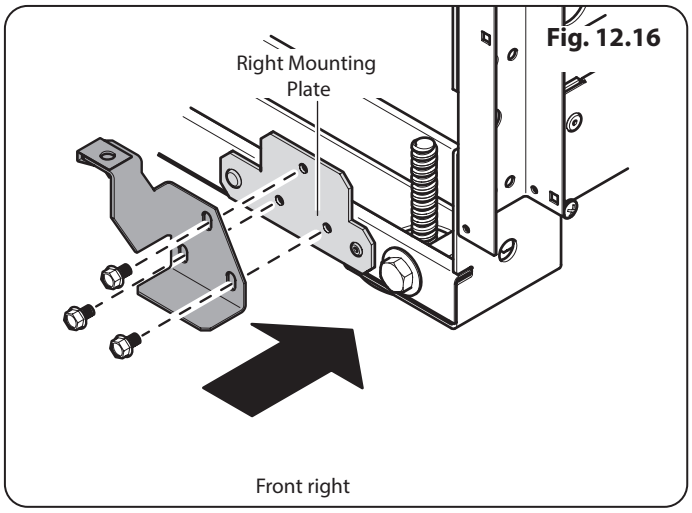

Fig. 12.17

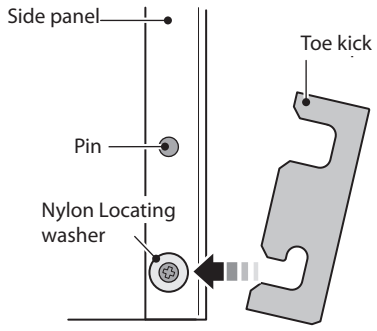

Side view of the front base

Fig. 12.18

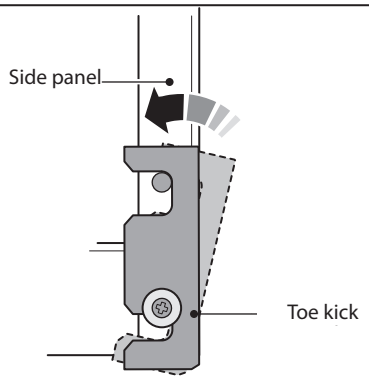

Side view of the front base

Fig. 12.19

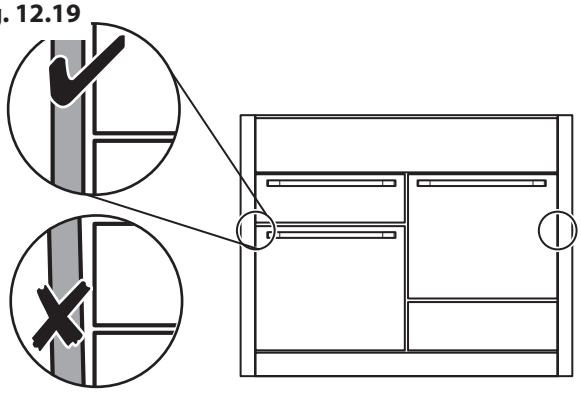

Fig. 12.20

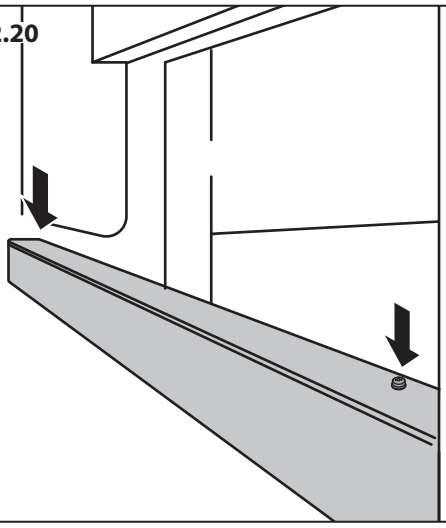

Fitting the bottom panel *(toe kick)*

1. Tilt the bottom of the panel slightly to locate the lower slots onto the washers (**Fig. 12.17**). Now rotate the panel to fit over the pins (**Fig. 12.18**).
2. Using the two screws and allen key supplied, loosely fit the bottom panel onto the mounting brackets (**Fig. 12.20**). **DO NOT tighten at this stage.**
3. Adjust the bottom panel to set the gap between the side panels and doors equally (**Fig. 12.19**). When it is positioned correctly, use a suitable flat open-ended spanner to tighten the bracket screws, and then tighten the bottom panel screws (**Fig. 12.20**) with the allen key provided.

Fitting the drawer

1. To fit the drawer, pull the side rails fully out (**Fig. 12.21**).
2. Carefully move the drawer back between the rails and rest it on the side rails.
3. At each side, hold the front of the drawer and pull the side rail forward so that the clips click into position, holding the drawer to the side rails (**Fig. 12.22**).

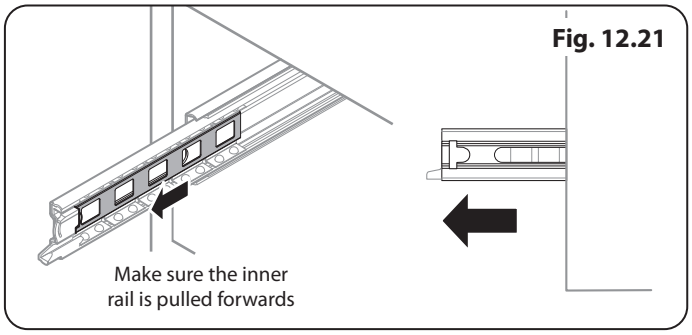

Fig. 12.21

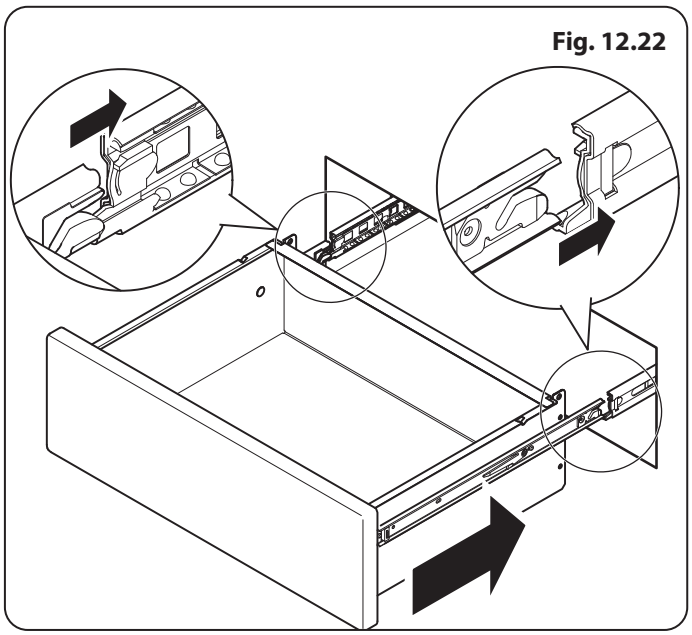
Fig. 12.22

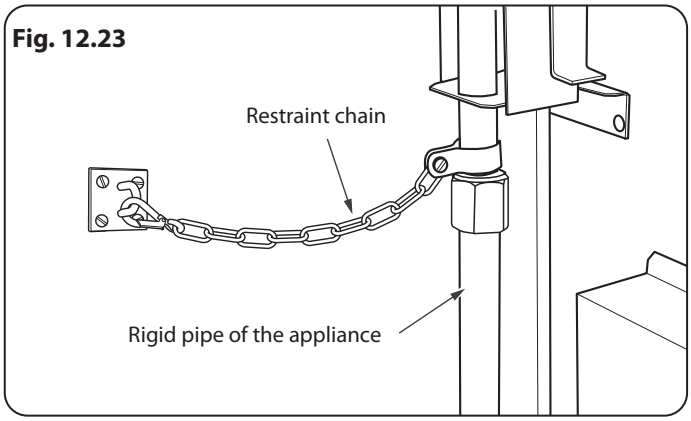

Fig. 12.23

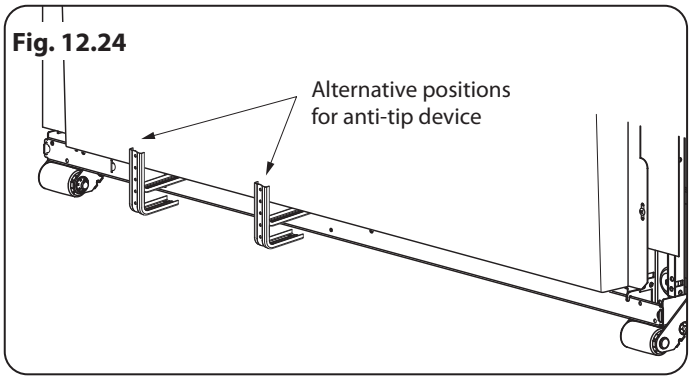

Fig. 12.24

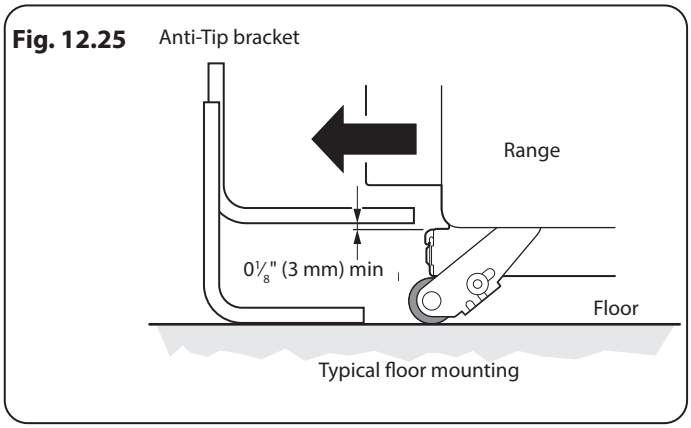

Fig. 12.25

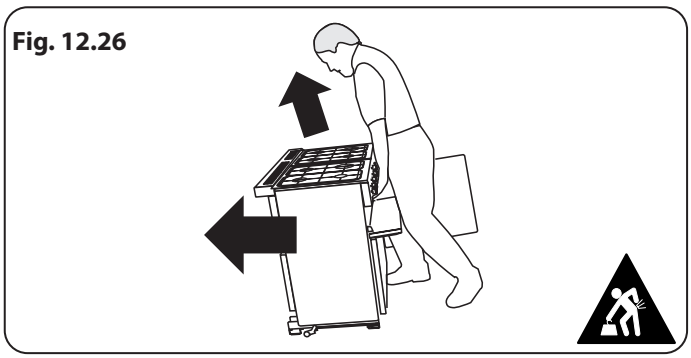

Fig. 12.26

Fitting the restraint chain and anti-tip device

1. A range using a flexible gas connector must be secured with a suitable restraint chain and anti-tip device.
2. When fitting the restraint chain it should be kept as short as is practicable and fixed firmly to the rigid pipe at the top, right-hand, rear of the range, when viewed from the front (**Fig. 12.23**).

⚠ **DO NOT fix the chain to the flexible hose at the base of the range.**

3. A suitable anti-tip device is supplied and shown in **Fig. 12.24**.
4. When fitting the anti-tip bracket (**Fig. 12.24** and **Fig. 12.25**), adjust the bracket to give the smallest practicable clearance between the bracket and the engagement slot in the rear of the range.
5. Fit the bracket so that it engages as far as possible over the chassis of the range.

⚠ **DO NOT operate the range before the appliance is in its installed position and the anti-tip devices are engaged.**

⚠ **If the appliance is moved ensure that the anti-tip devices are re-engaged and the range has been returned to its original installed position.**

⚠ **DO NOT step, lean or swing on the range doors or drawer as this could tip the range and result in serious injury or death.**

Completing the move

1. Open the broiler door and right-hand oven door so that you can get a good grip on the bottom of the fascia panel as you move the range (**Fig. 12.26**).
2. Position the range close to its final position.
3. Check that the anti-tip devices are engaged before moving the range into its final, installed position.
4. Re-check that the appliance is level.

⚠ **DO NOT use the door handles or control knobs to manoeuver the range.**

13. Removing the side panels

DISCONNECT THE ELECTRICAL SUPPLY.

You will need the following equipment to remove the side panels:

- Cross-head screwdriver
- Flat head screwdriver
- Allen keys (provided in pack).

Removing the storage drawer

1. Pull the drawer out to its furthest point.
2. Push the ends of the plastic clips (**Fig. 13.1** and **Fig. 13.2**) to release the catches holding the drawer to the side runners. At the same time pull the drawer forward and away from the side runners.

For safety make sure the drawer runners are out of the way.

Removing the bottom panel *(toe kick)*

1. After removing the drawer open the left-hand oven door.
2. Unscrew the two allen head screws **(Fig. 13.3)**, lift the bottom panel up and slightly rotate the panel away from the pins **(Fig. 13.4)**.

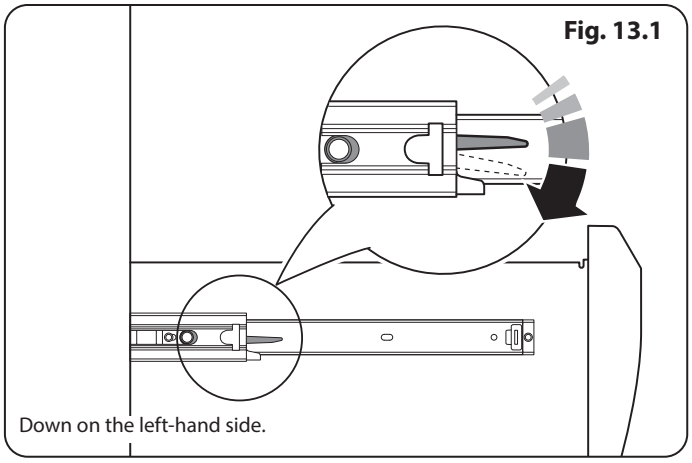

Fig. 13.1

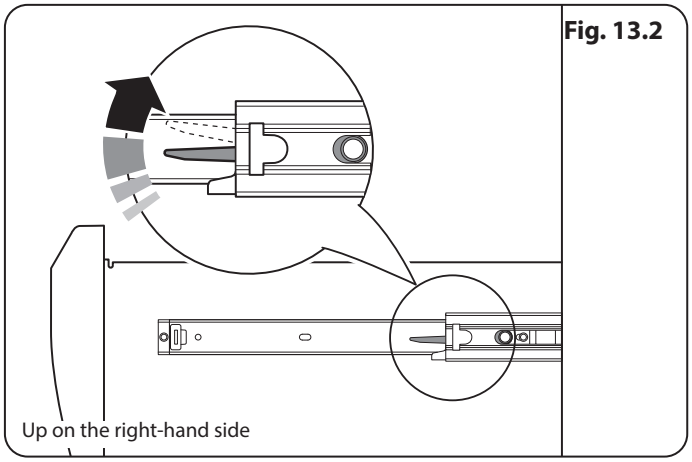

Fig. 13.2

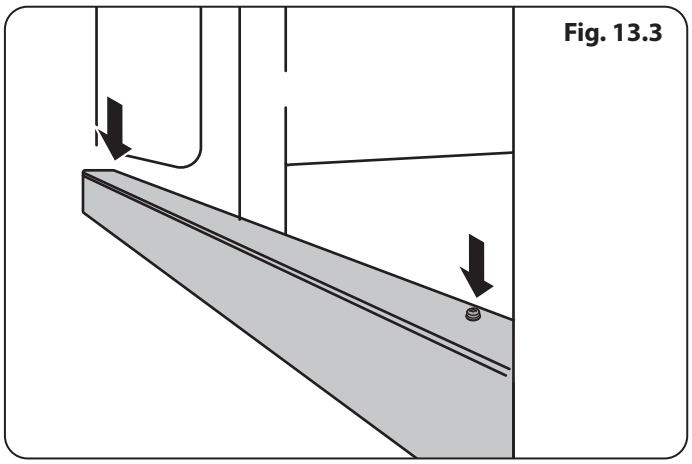
Fig. 13.3

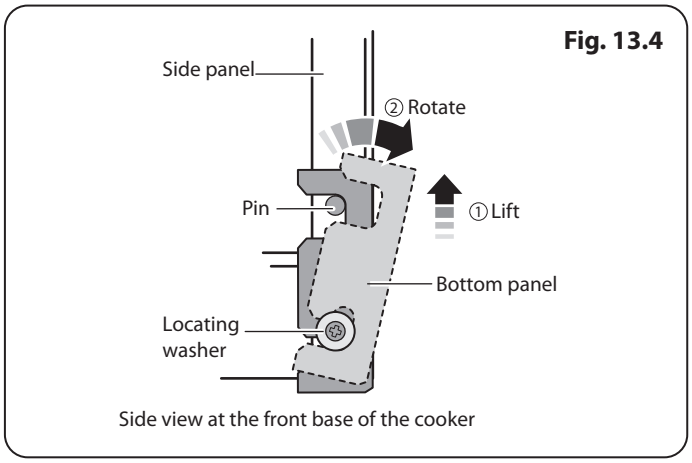

Fig. 13.4

Fig. 13.5

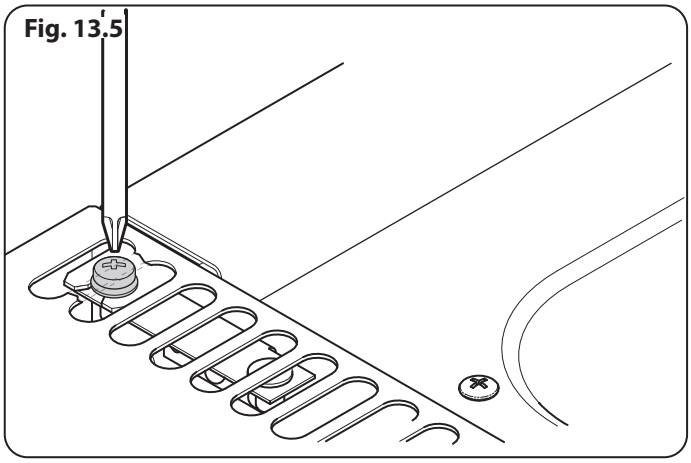

Fig. 13.6

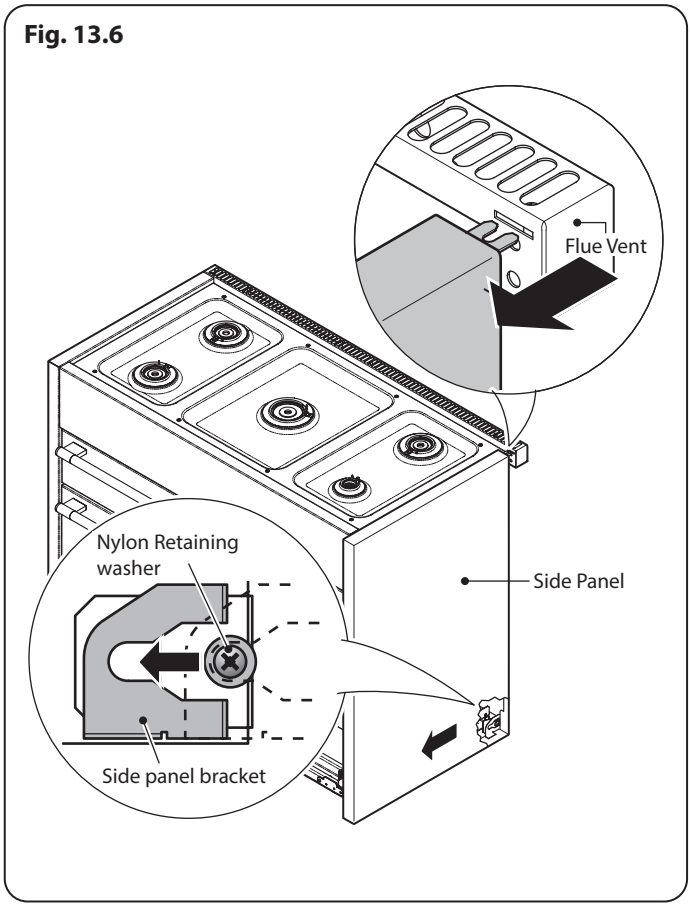

Fig. 13.7

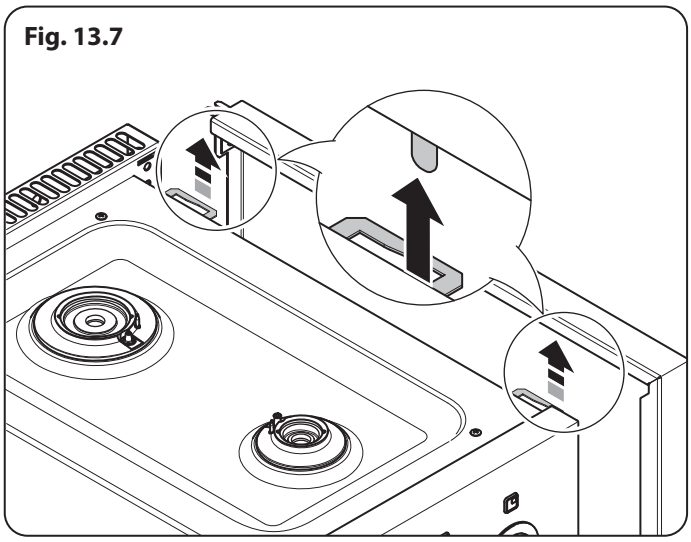

Removing the side panels

1. Loosen one screw in the vent (**Fig. 13.5**).
2. Push forward the side panel so that it moves away from the flue vent and the retaining washer (**Fig. 13.6**).
3. Inside the top of the side panel top are two tabs. Move the side panel up and away from the range (**Fig. 13.7**).

14. Gas connection

Installation of this range must conform with local codes or, in the absence of local codes, with the National Fuel Gas Code, ANSI Z223.1-latest edition.

In Canada

The range must be installed in accordance with the current CGA Standard CAN/CGA-B149 – Installation Codes for Gas Burning Appliances and Equipment and/or local codes.

In The Commonwealth Of Massachusetts

This product must be installed by a licensed plumber or gas fitter when installed within the Commonwealth of Massachusetts.

A "T" handle type manual gas valve must be installed in the gas supply line to this appliance.

Gas supply requirements

Recommended gas pipe outlet locations are shown in **Fig. 14.1**and **Fig. 14.2**.

Provide adequate gas supply

Prior to installation, make sure that the local distribution conditions (nature of the gas and gas pressure) and the adjustment of the appliance are compatible.

The range is designed to operate at a manifold pressure of 4" of water column (1 kPa) on natural gas. A conversion kit for LP gas (Propane) is supplied with the range. When converted to LP gas, a pressure of 10" of water column (2.49 kPa) is required.

Make sure you are supplying your range with the correct type of gas.

If the range is to be used on LP gas, a qualified LP installer must convert it. We recommend that the range be converted before installation. This must be done before the range can be used on LP gas.

For proper operation, the pressure of natural gas supplied to the regulator must be between 4½" and a maximum of 13" of water column (1.12–3.24 kPa).

For LP gas, the pressure supplied must be between 10" and 13" of water column (2.49–3.24 kPa).

When checking for proper operation of the regulator, the inlet pressure stated must be at least 1" wc (249 Pa) above the manufacturer's specified manifold pressure).

The pressure regulator located at the inlet of the range manifold must remain in the supply line regardless of whether natural or LP gas is being used.

A flexible metal appliance connector used to connect the range to the gas supply line should have an I.D. of ½" and be 5 feet in length for ease of installation.

Fig. 14.1

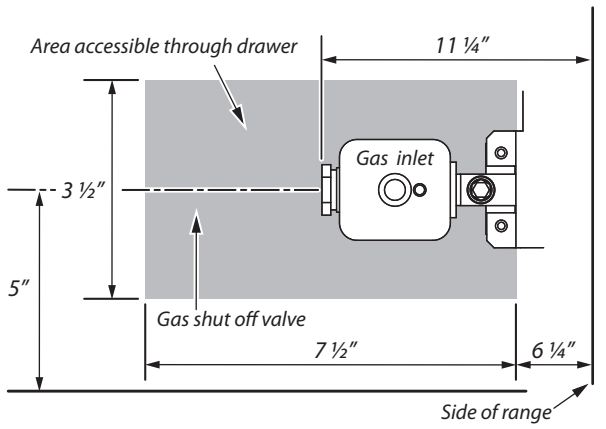

Fig. 14.2

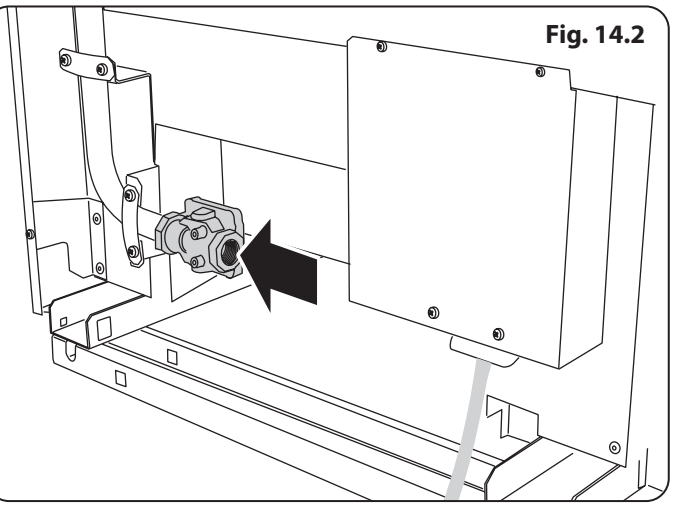

Fig. 14.3

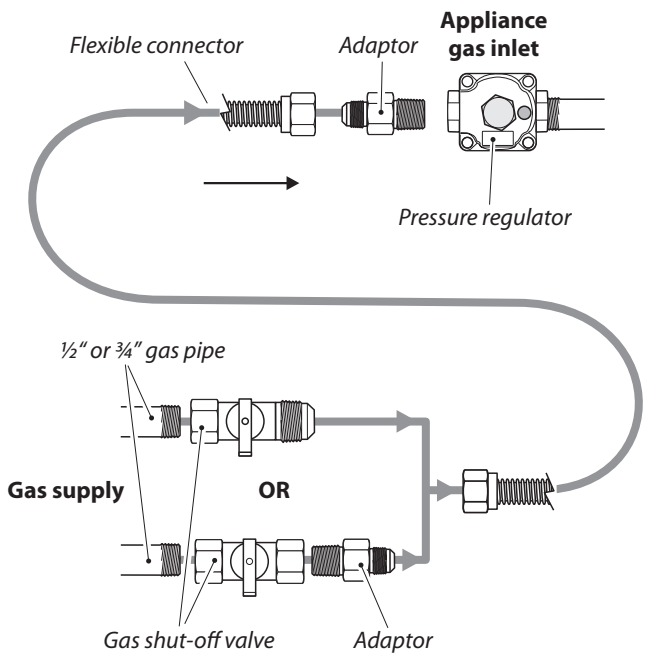

Fig. 14.4

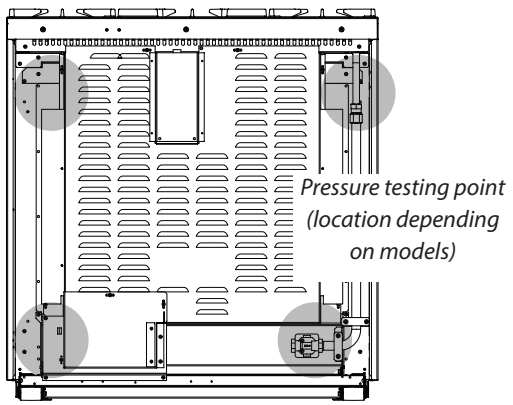

Fig. 14.5

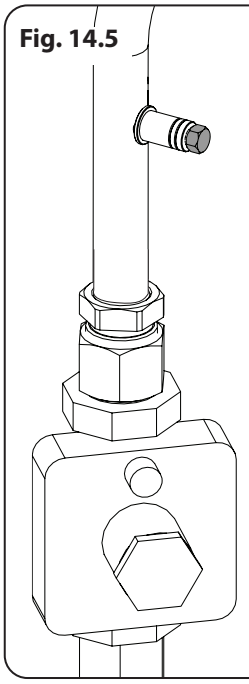

Fig. 14.6

Connect the range to the gas supply

Shut off the main gas supply valve before disconnecting the old range and leave it off until the new hookup has been completed. Don't forget to relight the pilot on other gas appliances when you turn the gas back on.

Because hard piping restricts movement of the range, the use of a CSA International-certified flexible metal appliance connector is recommended unless local codes require a hard-piped connection.

The installation shall be made with a connector that complies with ANSI Z21.69.CSA 6.16 and using a quick disconnect device complying with ANSI Z21.41.CSA 6.9 **(Fig. 14.3)**.

If disconnection of the restraint chain is necessary ensure the restraint is reconnected when the appliance is returned to its original installed position.

Never use an old connector when installing a new range. If the hard piping method is used, you must carefully align the pipe; the range cannot be moved after the connection is made.

To prevent gas leaks, put pipe joint compound on, or wrap pipe thread tape with Teflon* around, all male (external) pipe threads.

A. Install a manual gas line shut-off valve in the gas line in an easily accessed location outside of the range. Make sure everyone operating the range knows where and how to shut off the gas supply to the range.

B. Install a male ½" flare union adapter to the ½" NPT internal thread elbow at inlet of regulator. Use a backup wrench on the regulator fitting to avoid damage. When installing the range from the front, remove the 90° elbow for easier installation.

C. Install male ½" or ¾" flare union adapter to the NPT internal thread of the manual shut-off valve, taking care to backup the shut-off valve to keep it from turning.

D. Connect flexible metal appliance connector to the adapter on the range. Position the range to permit connection at the shut-off valve.

When all connections have been made, make sure all range controls are in the off position and turn on the main gas supply valve. Use a liquid leak detector, specifically manufactured for leak detection, at all joints and connections (including the Pressure Test screw, see **Fig. 14.5** and **Fig. 14.6**) to check for leaks in the system.

⚠ **DO NOT use a flame to check for gas leaks.**

When using test pressures greater than ½ psi (3.5 kPa) to pressure test the gas supply system of the residence, disconnect the range and individual shut-off valve from the gas supply piping.

The appliance must be isolated from the gas supply piping system by closing its individual manual shut-off valve during any pressure testing of the gas supply piping system at test pressures equal to or less than ½ psi (3.5 kPa).

* Teflon: Registered trademark of DuPont

15. Electrical connection

Have your appliance properly installed and grounded by a qualified technician. The installation must conform with local codes or in the absence of local codes in accordance with the National Fuel Gas Code, ANSI Z223.1/NFPA 54 or, in Canada, the Natural Gas and Propane Installation Code, CSA B149.1 and in addition the National Electrical Code NFPA 70 or the Canadian Electric Code, CSA C22.1.

Electrical requirements

For personal safety, DO NOT use an extension cord with this appliance. Remove the house fuse or open the circuit breaker before beginning installation.

WARNING Electrical Grounding Instructions. This appliance is shipped with a (four-prong) grounding plug for your protection against shock hazard and should be plugged directly into a properly grounded receptacle. DO NOT cut or remove the grounding prong from this plug.

Prior to connecting the power cord to the wall socket, inspect the cable for any damage that may have occurred. In the event of damage please consult your electrical installer.

Ensure that the power cord is routed so that it cannot become damaged during the installation.

This appliance must be supplied with the proper voltage and frequency, and connected to an individual, properly grounded branch circuit, protected by a circuit breaker or time-delay fuse, as noted on the rating plate.

Wiring must conform to National Electric Codes. If the electric service provided does not meet the above specifications, have a licensed electrician install an approved outlet.

Because range terminals are not accessible after range is in position, flexible service conduit or cord must be used.

Provide proper electrical supply

This range must be supplied with 240 V 60 Hz, and connected to an individual, properly grounded branch circuit protected by a circuit breaker or time-delay fuse. If the electrical service provided does not meet the above specifications, it is recommended that a licensed electrician install an approved outlet.

Connecting using the supplied cord and plug

Your range is shipped with a 4-prong NEMA 14-50P plug to be used in a NEMA 14-50R receptacle.

Your range is supplied with a ground link that can be used when connecting to a three wire cord. Consult your electrician before changing the supplied cord kit.

Recommended electrical outlet location

When connecting using a NEMA 14-50R receptacle, if possible position it so it can be accessed through the opening at the rear of the drawer cavity (**Fig. 15.1**). Alternate location within the shaded area in (**Fig. 15.2**). The distance between the back of the range and the wall is approximately 4" (10.6 cm).

Plug the range power cord into a properly grounded wall receptacle.

DISCONNECT THE ELECTRICAL SUPPLY.

Fig. 15.1

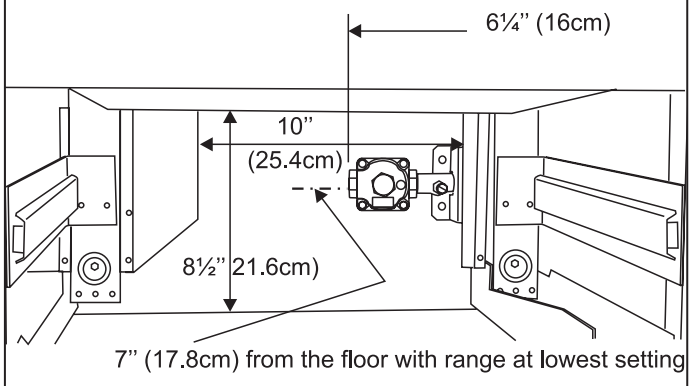

Opening inside the drawer cavity

Fig. 15.2

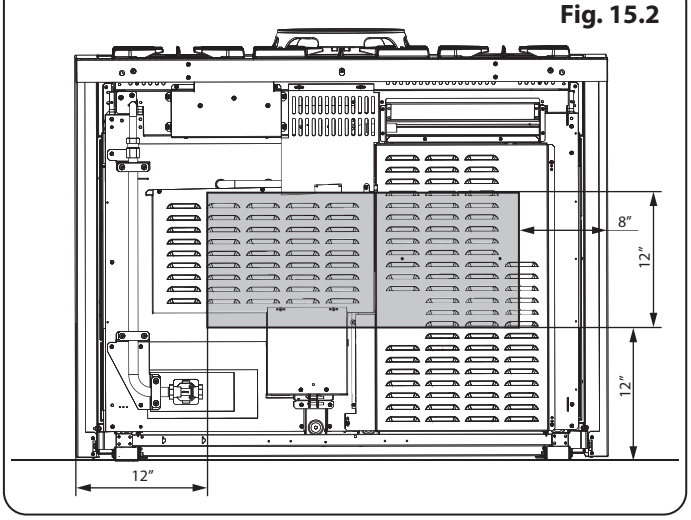

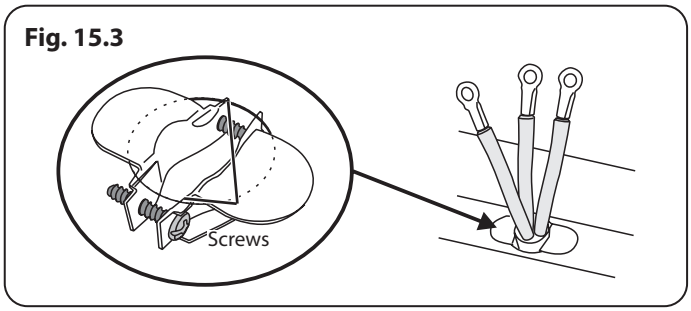

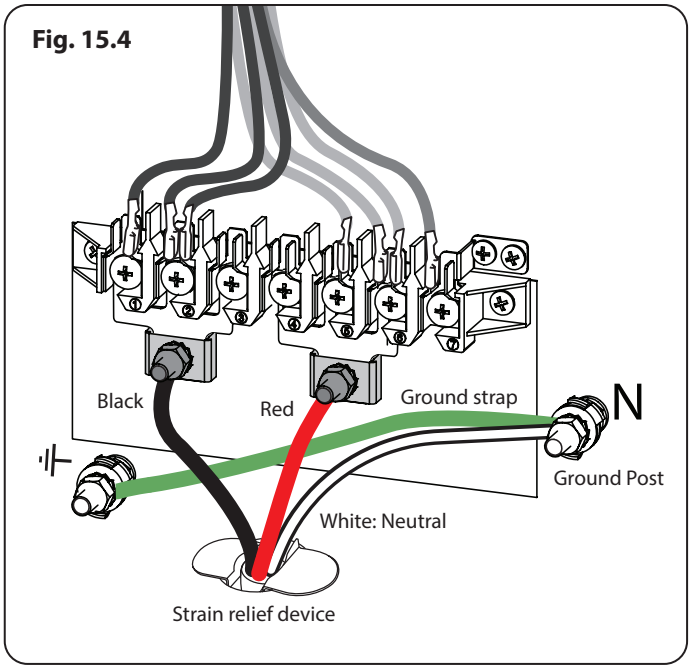

Fitting a 3-Wire Power Cord

Disconnect the supplied power cord from the terminal block and ground post. Keep the terminal block parts; you will need them. Slacken the strain relief clamp from the power cord, untighten the 2 screws (**Fig. 15.3**) and remove the power cord.

Insert the new power cord through the strain relief device but do not tighten the device yet.

⚠ **Your range is supplied with a ground strap that can be used when connecting to a three wire cord. Consult your electrician before changing the supplied cord kit.**

Fit the Ground strap to the neutral and ground terminals (**Fig. 15.4**).

The neutral or ground wire of the power cord must be connected to the neutral terminal of the connector block. The power leads must be connected to the outside terminals (**Fig. 15.4**).

Make sure the connections are tight. Now tighten the strain relief device to clamp the power cord.

Refit the electrical connection cover.

3-Wire Conduit Installation

Disconnect the supplied power cord from the terminal block and ground post. Keep the terminal block parts; you will need them. Remove the strain relief clamp from the power cord and remove the power cord and strain relief clamp from the mounting bracket.

The range is shipped with reducer plates to give a 1 ⅛" diameter opening for conduit connection (**Fig. 15.5**). Find the reducer plates (**Fig. 15.6**) in the conversion kit and fit them to the mounting bracket.

Fit a squeeze connector (not supplied with the range), to your conduit. Insert the conduit through the reducer plates on the mounting bracket. Allow enough slack to easily attach the wires to the terminal block (**Fig. 15.7**).

NOTE: Do not install the conduit without a squeeze connector.

A Ground strap is supplied in the conversion pack (**Fig. 15.7**). Fit the Ground strap to the neutral and ground terminals.

The neutral or ground wire of the power cord must be connected to the neutral terminal. The power leads must be connected to the outside terminals (**Fig. 15.8**).

NOTE: Make sure the wires are completely inserted into the terminals and secure connections are made.

Secure the squeeze connector in place in the bracket by tightening the squeeze connector screws.

Refit the electrical connection cover.

Fig. 15.5

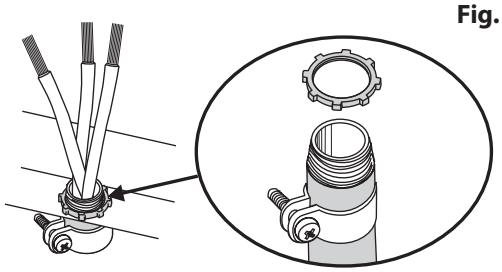

Fig. 15.6

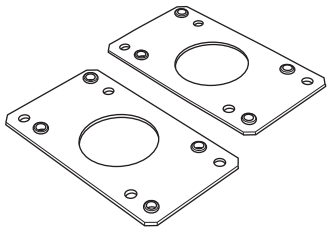

Fig. 15.7

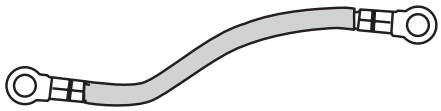

Fig. 15.8

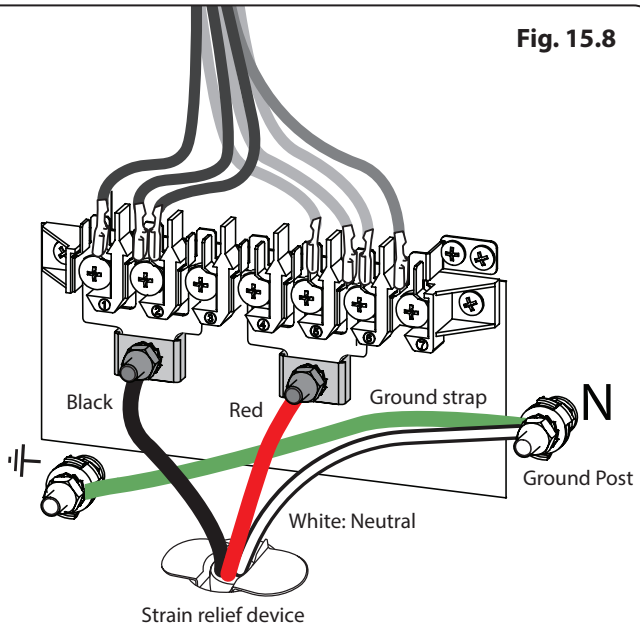

Fig. 15.9

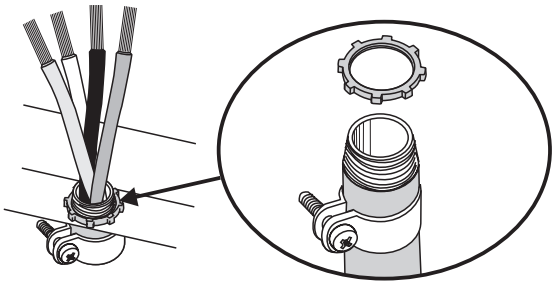

Fig. 15.10

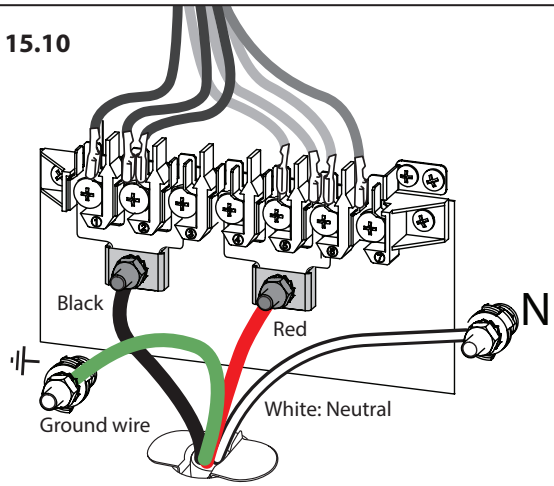

4-Wire Conduit Installation

Disconnect the supplied power cord from the terminal block and ground post. Keep the terminal block parts; you will need them. Remove the strain relief clamp from the power cord and remove the power cord and strain relief clamp from the mounting bracket (**Fig. 15.9**).

The range is shipped with reducer plates to give a 1 ⅛" diameter opening for conduit connection (**Fig. 15.5**). Find the reducer plates (**Fig. 15.6**) in the conversion kit and fit them to the mounting bracket.

Fit a squeeze connector (not supplied with the range), to your conduit. Insert the conduit through the reducer plates on the mounting bracket. Allow enough slack to easily attach the wires to the terminal block.

NOTE: Do not install the conduit without a squeeze connector.

Fit the wires to the ground post and terminal block (**Fig. 15.10**).

NOTE: Make sure the wires are completely inserted into the terminals and secure connections are made.

Secure the squeeze connector in place in the bracket by tightening the squeeze connector screws.

Refit the electrical connection cover.

Seal the Openings

Seal any openings in the wall behind the range and in the floor under the range when hookups are completed.

When all Connections are Completed

MAKE SURE THE FLOW OF COMBUSTION AND VENTILATION AIR TO THE RANGE IS UNOBSTRUCTED.

16. Final fitting and checks

Fitting the interlocking grates

Please note that the Continuous Grates supports are handed, and may prevent the centre pan supports from fitting correctly. There is a small indent in the rear of each of the outer supports. This indent should be towards the outer edge of the range (**Fig. 16.1**).

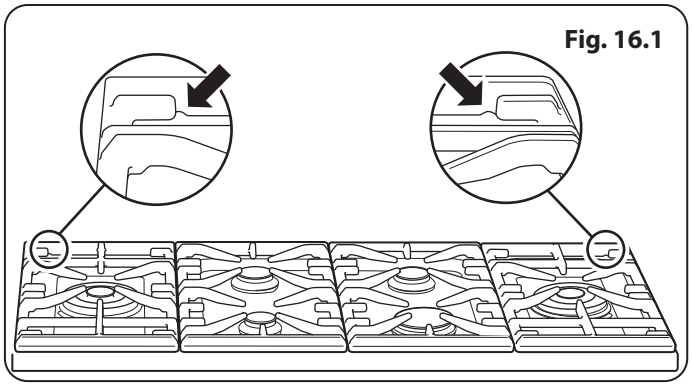

Checks

Cooktop check

Refer to "**Range Overview**" and check operation of each burner in turn. Be sure to use pans of the correct size and material.

Broiler check

Refer to "**Range Overview**" and check operation of the broiler and that it heats up*.

Oven check

Refer to "**Range Overview**" and check the operation of both ovens*. Check that the oven fans operate and the ovens heat up.

* The cooling fan, located at the rear right hand side of the cooktop, should operate with this function.

Customer care

Installer: Please complete your details in this guide, inform the user how to operate the range and hand over the instructions.

17. Circuit diagram

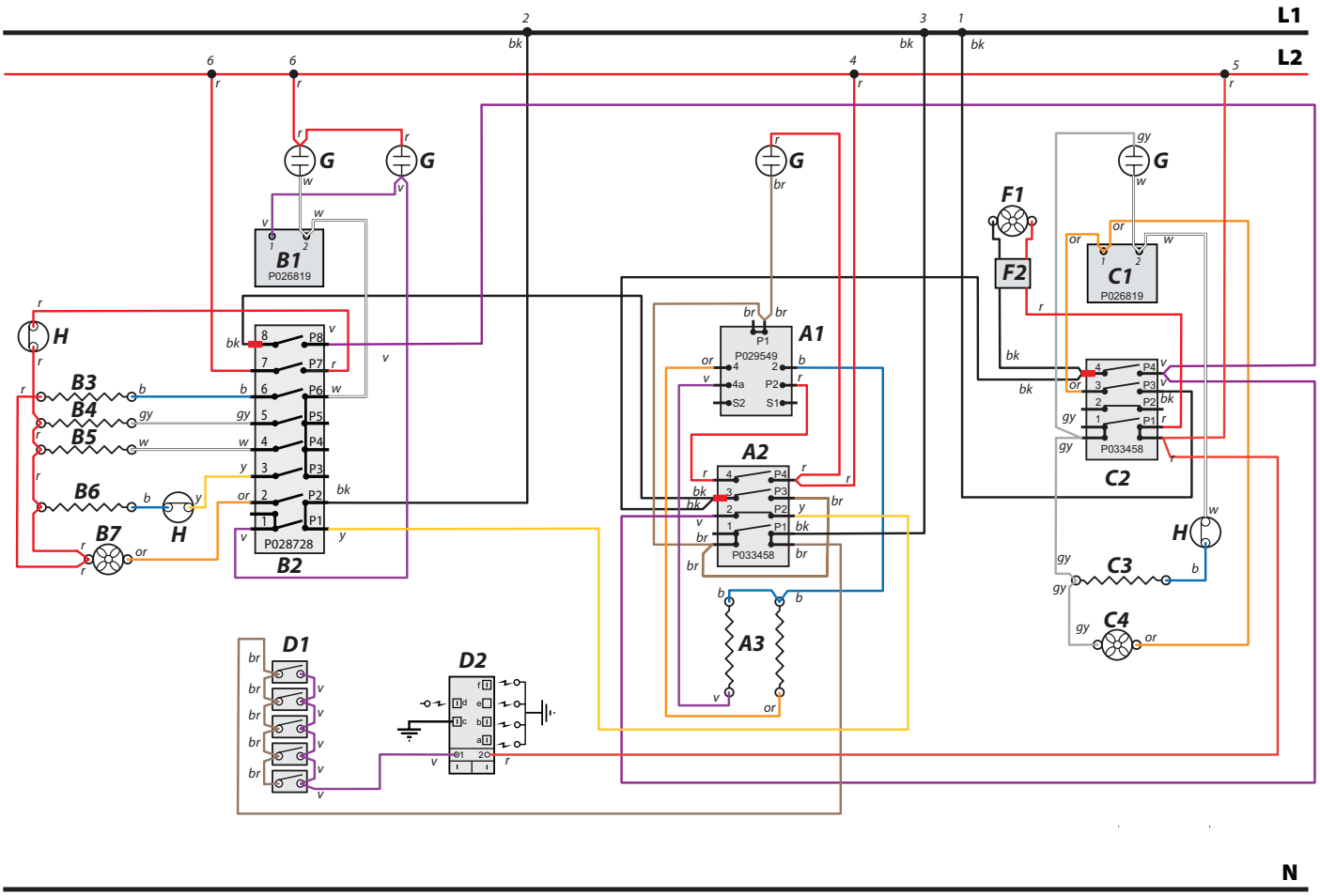

Code	Description
A1	Broiler Thermostat
A2	Broiler Controller
A3	Broiler Elements
B1	Left-hand oven thermostat
B2	Left-hand oven switch block
B3	Left-hand bottom element
B4	Left-hand oven top outer element
B5	Left-hand oven top inner element
B6	Left-hand oven fan element
B7	Left-hand oven fan motor

Code	Description
C1	Right-hand oven thermostat
C2	Right-hand oven switch block
C3	Right-hand oven element
C4	Right-hand oven fan motor
D1	Ignition switches
D2	Ignition spark generator
F1	Cooling fan motor
F2	Fan connector plug
G	Neon
H	Thermal cut-out

Code	Color
b	Blue
br	Brown
bk	Black
or	Orange
r	Red
v	Violet
w	White
y	Yellow
gy	Grey

18. Technical data

INSTALLER: Please leave these instructions with the user.

DATA BADGE LOCATION: Inside base drawer of cavity. Remove the drawer (see Overview > Storage for details).

COUNTRY OF DESTINATION: USA, Canada, Mexico.

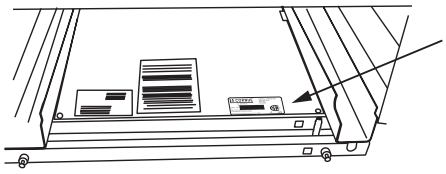

Connections

Electric Supply	240 V 60 Hz
Electric Rating	240V (2 Wire + N + Grd), 60Hz, 7.47 kW
Branch Circuit Protection	35 A
Connection Type	NEMA 14-50 P
Maximum total electric load 240 V (including oven fans, lights, etc.): * Load demand diversity calculation according to NFPA 70 article 220. Note: The maximum input at any time is given as both ovens fanned and broiler, plus cooling fan.	7.47 k W, (31 A)*
Gas Connection	½" NPT at rear right-hand side

Dimensions

Overall height	minimum 36 1/16" (916 mm)	maximum 37 3/16" (941mm)
Overall width	47 9/16" (1208 mm); see 'Positioning of Range'.	
Overall depth	28 5/32" (723 mm)	
Minimum space above cooktop	31 ½" (800 mm)	
Weight (unpacked)	337 LBS (153 Kg)	

Ratings

Oven	Left-hand Oven	Right-hand Oven	Broiler
Fan element	2.5 kW	2.5 kW	2.3 / 1.15 kW
Top element	1.2 kW	-	-
Browning element	1.15 kW	-	-
Bottom element	1.0 kW	-	-

Gas Top	Bypass Screw*	Natural Gas 4" WC		Propane Gas 10" WC	
		Input	Orifice	Input	Orifice
Centre burners	55	17,000 btu/hr	205	17,000 btu/hr	118
Larger burners	41	12,000 btu/hr	150	12,000 btu/hr	99
Right-hand front burner	33	6,000 btu/hr	112	6,000 btu/hr	68

* The valves in this range are fitted with adjustable bypass screws. The range is supplied with the bypass screws set for Natural gas. For LPG conversion the bypass screws must be screwed all the way down.

Oven data

Ovens	Left-hand Multi-function	Right-hand Convection
Maximum total electric load 240 V	2.5 kW	2.5 kW
Usable volume (cubic feet)	2.77	2.79

19. Warranty

CONSUMER WARRANTY

ENTIRE PRODUCT – LIMITED TWO YEAR WARRANTY

Any cosmetic faults must be reported within 7 days of installation.

AGA warrants the replacement or repair of all parts of this range which prove to be defective in material or workmanship, with the exception of the painted or porcelain enamel finish or plated surfaces, for two year from the date of original purchase. Such parts will be repaired or replaced at the option of AGA without charge, subject to the terms and conditions set out below.

The warranty period against defects in the painted or porcelain enamel finish, or plated surfaces, is 90 days from the date of original purchase. **The warranty does not include replacement of oven lamps.**

OVEN ELEMENTS - LIMITED SECOND THROUGH THIRD YEAR WARRANTY

AGA warrants the oven heating elements against defects in material or workmanship for an additional two years. These parts will be repaired or replaced at the discretion of AGA without charge, but you pay for labor and transportation subject to the terms and conditions set out below.

TERMS AND CONDITIONS

1. This warranty applies only for single family domestic use when the range has been properly installed according to the instructions supplied by AGA and is connected to an adequate and proper utility service.

Damage due to faulty installation, improper usage and care, abuse, accident, fire, flood, acts of God, commercial, business or rental use, and alteration, or the removal or defacing of the serial plate, cancels all obligations of this warranty. Service during this warranty must be performed by a factory Authorized Service Person.

2. **Warranty applies to product only in the country in which it was purchased.**
3. AGA is not liable for any claims or damages resulting from any failure of the range or from service delays beyond their reasonable control.
4. To obtain warranty service, the original purchaser **must** present the original Bill of Sale, Model and Serial number. Components repaired or replaced are warranted through the remainder of the original warranty period only.
5. The warranty does not cover expenses involved in making this appliance readily accessible for servicing.
6. This warranty gives you specific legal rights. Additional warranty rights may be provided by law in some areas.
7. Adjustments such as calibrations, leveling, tightening of fasteners, or utility connections normally associated with original installation are the responsibility of the dealer or installer and not that of the Company.

TO ENSURE PROMPT WARRANTY SERVICE, SEND IN YOUR WARRANTY CARD WITHIN 10 DAYS OF PURCHASE.

If further help is needed concerning this warranty, contact:

PLACE OF PURCHASE _____

DATE OF PURCHASE _____

SERIAL NUMBER _____

MODEL NUMBER _____

Middleby Residential
4960 Golden Pkwy
BLDG 3
Buford, GA 30518
Business 770.932.7282
Fax 770.932.7292
Toll Free Telephone 800.241.9152

Middleby Residential
4960 Golden Pkwy
BLDG 3
Buford, GA 30518
Business 770.932.7282
Fax 770.932.7292
Toll Free Telephone 800.241.9152

https://www.agarangeusa.com/